GSA TECHNOLOGY CO., LTD.
No.81, Alley 67, Lane 66, Fengnan St., Fengyuan City,
Taichung County 42052, Taiwan.
Tel: +886-4-25377888
Fax: +886-4-25368899
E-mail: goldensn@ms7.hinet.net
http://www.gsaplus.com.tw

GSA TECHNOLOGY(JIASHAN) CO., LTD.
No.188, Yiqun Road, Yaozhuang Town,
Jiashan City, Zhejia, China.
Tel : +86-0573-8477-1999
Fax : +86-0573-8477-9888
E-mail: gsp@gsaplus.com.tw

www.gsaplus.com.tw

2024.06 DESIGNED BY 886-4-2296-5959

CNC Rotary Table / Turret

GSA TECHNOLOGY CO., LTD.

GSA TECHNOLOGY CO., LTD.

CNC Rotary Table / Turret

Profession & Innovation

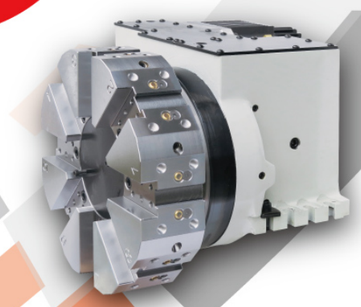

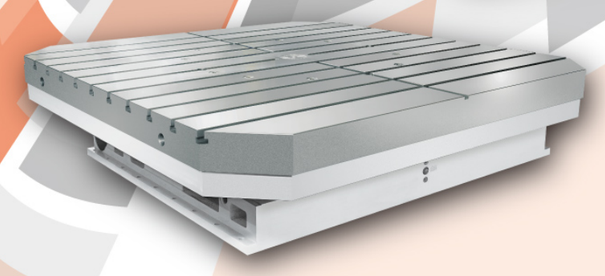

www.gsaplus.com.tw

Core of Technology

IDEAL PERFORMANCE, HIGH EFFICIENCY, GREAT DURABILITY, with Excellent Worm Gear System

Materials

Worm shaft : Case hardened alloy steel
Worm wheel : Special high tensile brass alloy equal to strength of a steel alloy

Efficiency of transmission torque

The combination of worm shaft and worm wheel makes the friction factor smaller and the efficiency of transmission torque larger

Tooth profile

The depth of tooth is larger in module of standard size

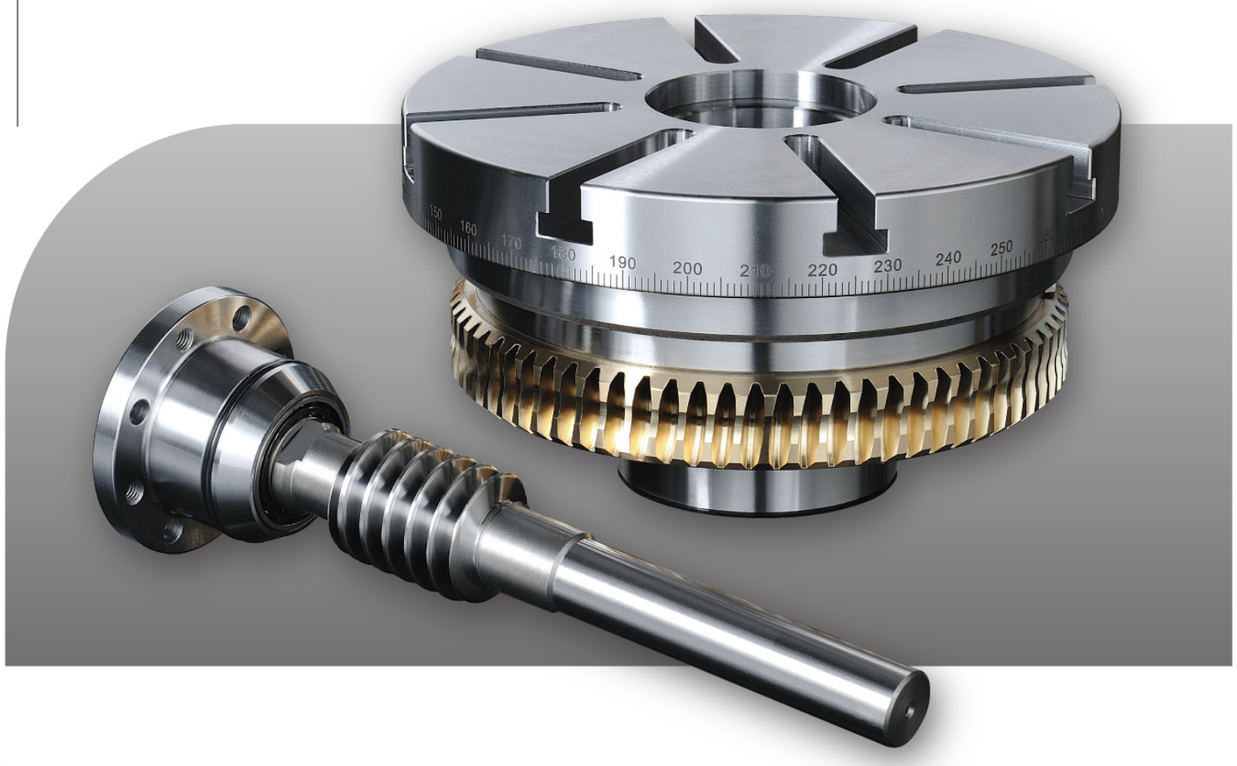

GSA+

1 The Matching Schema of Dual Lead Worm Wheel and Worm Shaft

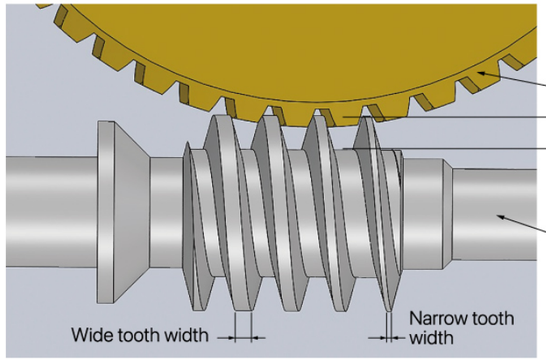

- Surface contact between in worm wheel and worm shaft can be reached 35%~45% suitable for heavy cutting and continuous processing
- Good wear-resisting, there is no need to adjust backlash at least 1~2 years
- Indexing accuracy class is maintained within 10 (sec.) (standard 15 sec.)

2 The Schema of Brake System

2-1 Multi-brake Disc System Designed

- Compact & high durability designed; there is no lifting-up situation during rotating

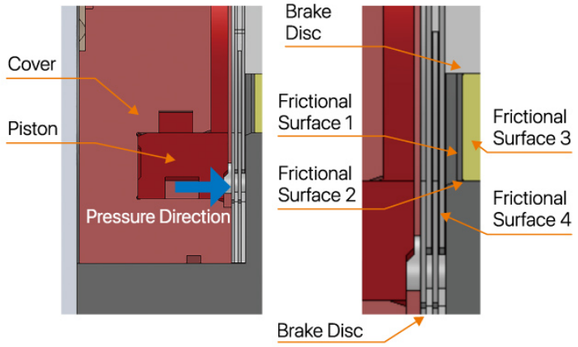

2-2 Surrounding Sleeve Brake System

- Spindle clamp while pressure is "ON"
- Unclamp without any of delay

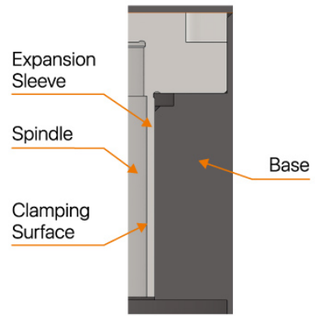

3 The Schema of Advantage Bearing System

- 3 sides constraint designed, supporting force is greater than same dimension of Cross-Roller Ring (bearing) above 2 times
- Dual bearings designed, extending diameter suitable for heavy cutting

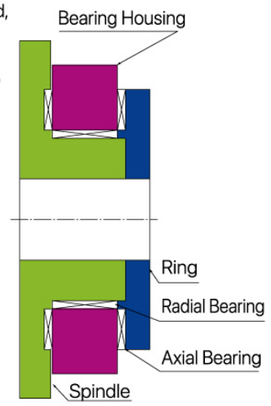

4 Rotary Table 3D Exploded View

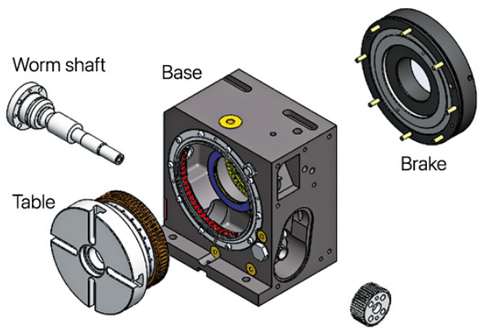

INDEX

Machining Facilities


GERMANY made GLEASON PFAUTER CNC Hobbing Machine

Adopting Germany made GLEASON PFAUTER CNC Hobbing machine (P600/800) for worm wheel machining, indexing accuracy class can be reached 5 (sec.)
Accuracy class is conformed to DIN2 (same as JIS 0). Using built-in Direct Drive Motor designed in spindle of rotary table, there is no backlash situation.

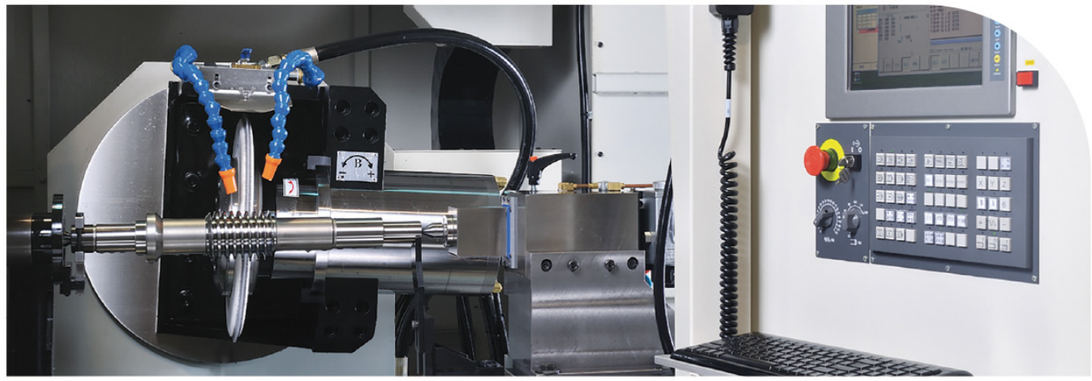

CNC Worm Shaft Grinding Machinie

Adopting direct drive motor in spindle and other axes use linear motor for worm shaft machining.
Inspecting accuracy can be reached 0.002mm anywhere in grinding.


Adopting GERMANY made DMG 5 Axes Milling Machine.

Machine Job: Tool-Disc Machining from Roughing to Finish Mahcining.

GSA+

CNC Rotary Table

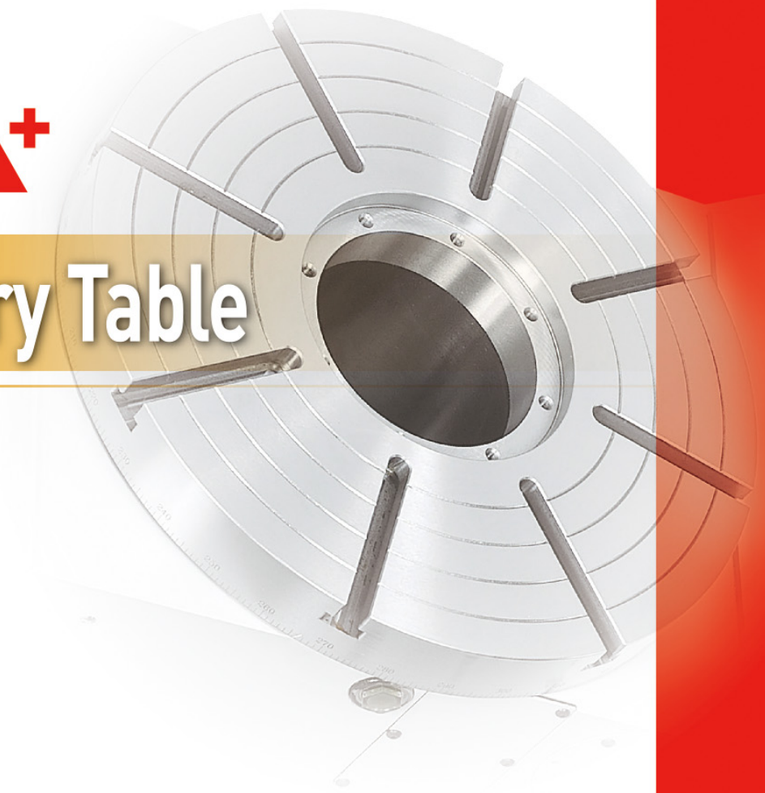

CNC Rotary Table / Satandard Type

CNC-250 R/L

- Type of CNC Rotary Table
- Table Dia.
- Motor Position at Right-side or Left-side

◎ A combination of high precision bronze / nickel worm wheel and case hardened steel worm screw ensures long term indexing accuracy.
◎ Dual lead worm wheel/worm shaft which allowable easy backlash adjustmen.
◎ Double bearing design suitable for heavy cutting.
◎ One piece of faceplate and spindle design which offer rigid construction.
◎ Low Gear ratio design (90:1) which offer high speed feed rate.
◎ Large thru hole design which allowable large work piece going thru spindle.

ITEM / MODEL		CNC-120R	CNC-170R	CNC-200R	CNC-250R	CNC-320R
Table Dia. (mm/inch)		120 / 4.72	170 / 6.69	200 / 7.87	250 / 9.84	320 / 12.60
Center Height in Vertical (mm / inch)		115 / 4.53	135 / 5.31	160 / 6.3	185 / 7.28	210 / 8.27
Thru-Hole Dia. (mm / inch)		30^{H7} / 1.18^{H7}	35^{H7} / 1.37^{H7}	35^{H7} / 1.37^{H7}	70^{H7} / 2.75^{H7}	110^{H7} / 4.33^{H7}
Width of T-slot (mm / inch)		10^{H7} / 0.39^{H7}	12^{H7} / 0.47^{H7}	12^{H7} / 0.47^{H7}	12^{H7} / 0.47^{H7}	14^{H7} / 0.55^{H7}
Width of Guide Block (mm / inch)		14^{h7} / 0.55^{h7}	18^{h7} / 0.71^{h7}	18^{h7} / 0.71^{h7}	18^{h7} / 0.71^{h7}	18^{h7} / 0.71^{h7}
Servo Motor Type	FANUC	α2 i	α4 i	α4 i	α4 i / α8 i	α12 i
Gear Ratio		1:60	1:90	1 : 90	1:180 / 1:90	1:90
Min. Indexing Unit Degree (degree)		0.001°	0.001°	0.001°	0.001°	0.001°
Max. R.P.M. (rpm) (motor : 2000 / rpm)		33.3	22.2	22.2	11.1 / 22.2	11.1 / 22.2
Pneu. Clamp Force (kg•m) (P : 5kg / cm^2)		6	25	25	47	71
Hydro. Clamp Force (kg•m) (P : 20kg / cm^2)		12	50	50	94	142
Indexing Accuracy Class (sec.)		30"	20"	20"	15"	15"
Repeatability (sec.)	Unidirectional	4"	4"	4"	4"	4"
	Bidirectional	8"	8"	8"	8"	8"
Max. Machining Force (kg•m)		12	23	23	45	78
N.W. (kgs)		28	70	84	124	210
Max. Load	Vertical W	W=35 kg	W=100 kg	W=125 kg	W=150 kg	W=175 kg
	Horizontal W	W=75 kg	W=200 kg	W=250 kg	W=300 kg	W=350 kg

※ GSA remains the right of modification. All specifications can be modified according to customers' requirement.

● Outlet of wire box could be decided by customers order

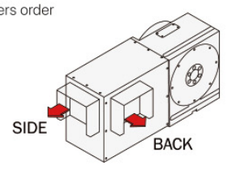

◎ Servo motor model → Refer to P48
◎ Adapting Tailstock → Refer to P43-45
◎ To match AC- / DC- / Stepping-Controller → Refer to P46
◎ Optional accessories → Refer to P47

CNC-200R

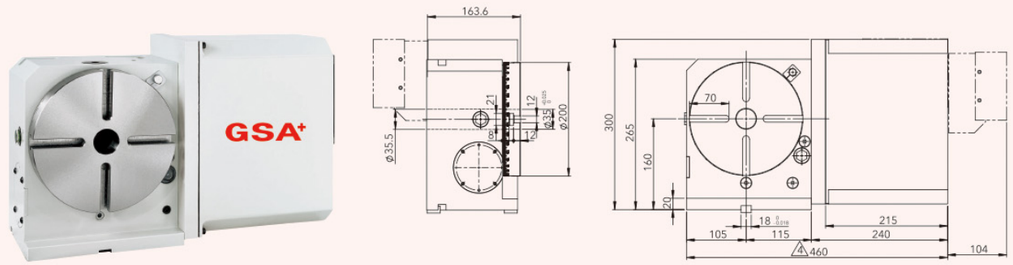

CNC-250R

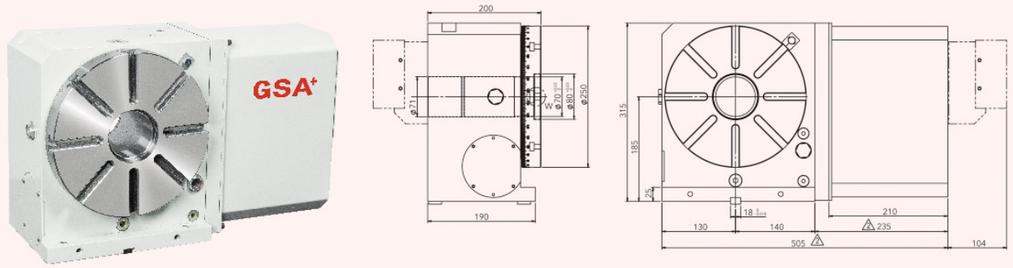

CNC-320R

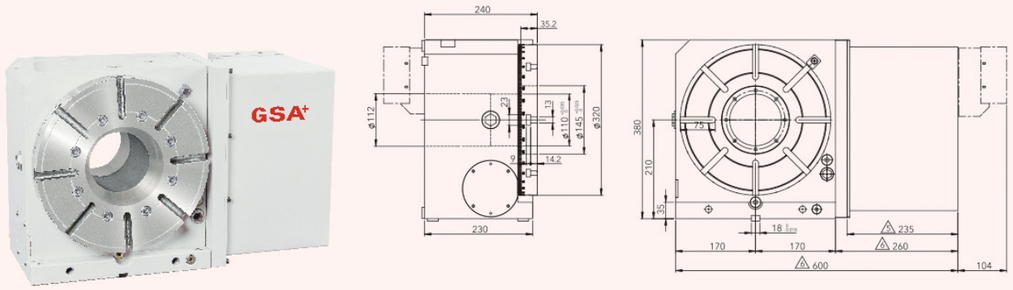

NOTE : Difference motor becomes difference length of motor cover

CNC

GSA+
GSA TECHNOLOGY CO., LTD.

CNC-800 R/L

- Type of CNC Rotary Table
- Table Dia.
- Motor Position at Right-side or Left-side

◎ A combination of high precision bronze / nickel worm wheel and case hardened steel worm screw ensures long term indexing accuracy.
◎ Dual lead worm wheel/worm shaft which allowable easy backlash adjustmen.
◎ Double bearing design suitable for heavy cutting.
◎ Large thru hole design which allowable large work piece going thru spindle.

ITEM / MODEL		CNC-400R	CNC-500R	CNC-630R	CNC-800R
Table Dia. (mm/inch)		400 / 15.75	500 / 19.69	630 / 24.8	800 / 31.5
Center Height in Vertical (mm / inch)		250 / 9.84	310 /12.20	400 / 15.75	480 / 18.90
Thru-Hole Dia. (mm / inch)		150^{H7} / 5.9^{H7}	180^{H7} / 7.09^{H7}	254^{H7} / 10^{H7}	254^{H7} / 10^{H7}
Width of T-slot (mm / inch)		14^{H7} / 0.55^{H7}	18^{H7} / 0.71^{H7}	18^{H7} / 0.71^{H7}	20^{H7} / 0.79^{H7}
Width of Guide Block (mm / inch)		18^{h7} / 0.71^{h7}	18^{h7} / 0.71^{h7}	18^{h7} / 0.71^{h7}	22^{h7} / 0.87^{h7}
Servo Motor Type	FANUC	α12 i	α12 i / α22 i	α22 i	α22 i
Gear Ratio		1:90	1:120	1:180	1:180
Min. Indexing Unit Degree (degree)		0.001°	0.001°	0.001°	0.001°
Max. R.P.M. (rpm) (motor : 2000 / rpm)		22.2	16.7	11.1	11.1
Pneu. Clamp Force (kg•m) (P : 5kg / cm^2)		92	125	350	430
Hydro. Clamp Force (kg•m) (P : 20kg / cm^2)		184	250	700	1050
Indexing Accuracy Class (sec.)		15"	15"	15"	15"
Repeatability (sec.)	Unidirectional	4"	4"	4"	4"
	Bidirectional	8"	8"	8"	8"
Max. Machining Force (kg•m)		160	230	320	350
N.W. (kgs)		280	480	860	1200
Max. Load	Vertical 	W=300 kg	W=350 kg	W=400 kg	W=800 kg
	Horizontal 	W=500 kg	W=600 kg	W=800 kg	W=1500 kg

※ GSA remains the right of modification. All specifications can be modified according to customers' requirement.

◎ Servo motor model → Refer to P48
◎ Adapting Tailstock → Refer to P43-45
◎ To match AC- / DC- / Stepping-Controller → Refer to P46
◎ Optional accessories → Refer to P47

CNC-630R

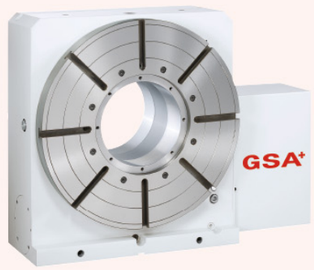

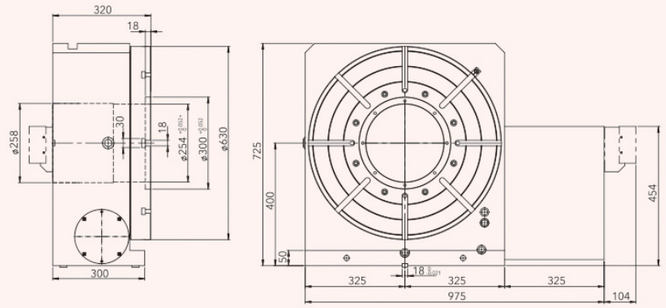

CNC-800R

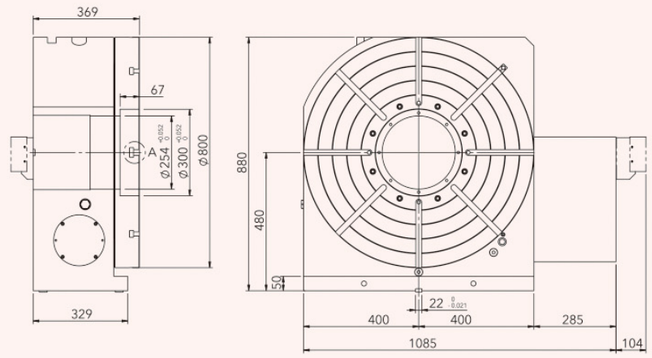

CNC

Large Size CNC Rotary Table

CNC-2000 HV

- Type of CNC Rotary Table
- Table Dia.
- Vertical & Horizontal Application

◎ Table size form size 1,000mm to size 2,000mm can be manufactured in both Vertical/Horizontal position. With high accuracy and high loading capacity which are suitable for heavy machining and metrology applications.
◎ All units in Tables are manufactured from high quality materials and workmanship. Every Table has Running/Accuracy testing for at least 48 performance confidence.
◎ Can be designed by customers' drawings Saddle.
◎ 0.001 degree increment is standard. Indexing accuracy can be choosed by customers' request. 5 sec. or 10 sec. (encoder is required.)

ITEM / MODEL		CNC-1000S1	CNC-1200S1	CNC-1500S1	CNC-2000HV
Table Dia (mm/inch)		1000 / 39.35	1200 / 47.21	1500 / 59.02	2000 / 78.69
Center Height in Vertical (mm / inch)		650 / 25.57	810 / 31.87	900 / 35.41	1100 / 43.28
Center Holes (mm / inch)		-	-	-	200x70 / 7.87x2.75
Width of T-slot (mm / inch)		20^{H7} / 0.79^{H7}	20^{H7} / 0.79^{H7}	22^{H7} / 0.87^{H7}	28^{H7} / 1.10^{H7}
Width of Guide Block (mm / inch)		22^{h7} / 0.87^{h7}	22^{h7} / 0.87^{h7}	28^{h7} / 1.10^{h7}	36^{h7} / 1.42^{h7}
Servo Motor Type	FANUC	α30 i	α30 i	α30 i	α40 i
Gear Ratio		1:360	1:360	1:720	1:720
Min. Indexing Unit Degree (degree)		0.001°	0.001°	0.001°	0.001°
Max. R.P.M. (rpm) (motor : 2000 / rpm)		5.55	5.55	2.78	2.78
Hydro. Clamp Force (kg•m) (P:35kg / cm²)		1440	1440	1600	5500
Indexing Accuracy Class (sec.) (No Encoder)		30"	30"	30"	30"
Repeatability (sec.) (No Encoder)	Unidirectional	4"	4"	4"	4"
	Bidirectional	8"	8"	8"	8"
Max. Machining Force (kg•m)		500	500	600	700
N.W. (kgs)		1500	3500	6000	8000
Max. Load	Vertical 	W=1500 kg	W=2000 kg	W=3000 kg	W=4000 kg
	Horizontal 	W=3500 kg	W=5000 kg	W=8000 kg	W=10000 kg

※ GSA remains the right of modification. All specifications can be modified according to customers' requirement.

◎ Servo motor model → Refer to P48
◎ Adapting Tailstock → Refer to P43-45
◎ To match AC-/DC-/Stepping-Controller → Refer to P46
◎ Optional accessories → Refer to P47

GSA+
GSA TECHNOLOGY CO., LTD.

CNC-1000S1

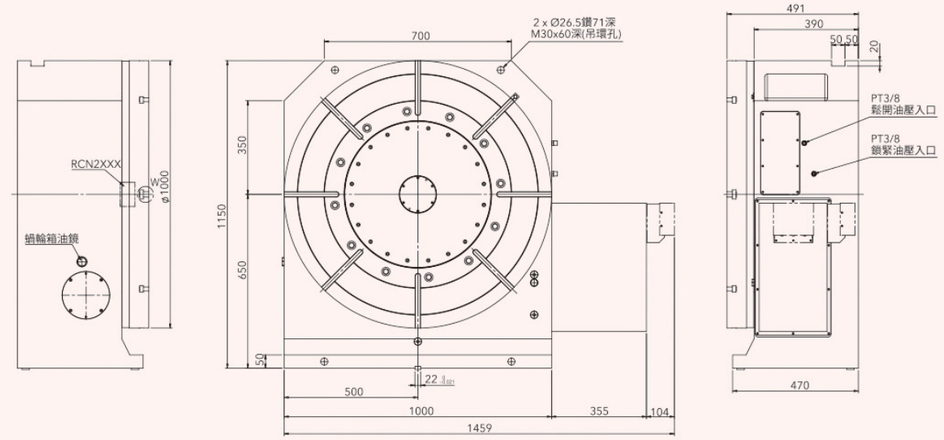

CNC-2000HV

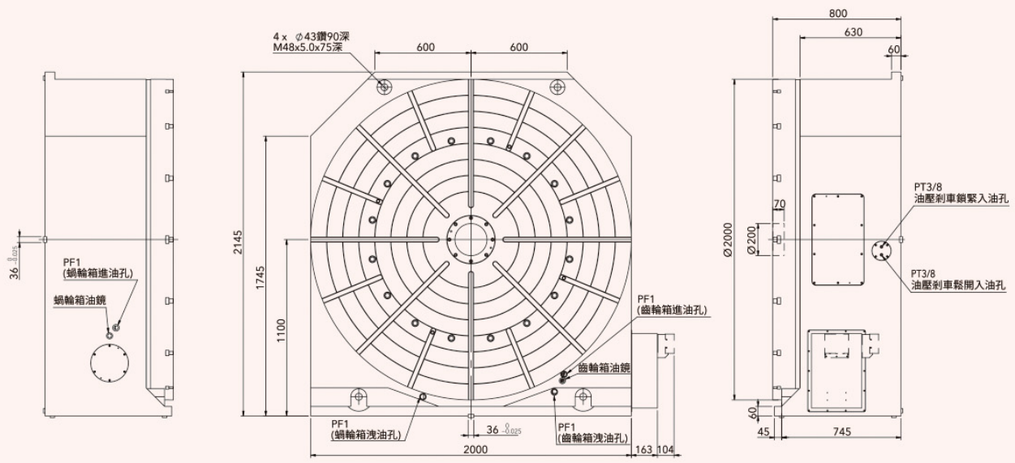

CNC

CNC Rotary Table / Mega Thru Hole Type

CNC B-800 R

- Type of CNC Rotary Table
- Mega Thru Hole
- Table Dia.
- Motor Position at Right-side

◎ A combination of high precision bronze / nickel worm wheel and case hardened steel worm screw ensures long term indexing accuracy.
◎ Dual lead worm wheel / worm shaft which allowable easy backlash adjustment.
◎ Mega thru hole design which allowable large work piece going thru spindle.

ITEM / MODEL		CNCB-800R	CNCB-800RT
Table Dia. (mm/inch)		800 / 31.5	
Center Height in Vertical (mm / inch)		480 / 18.90	
Thru-Hole Dia. (mm / inch)		450^{H7} / 17.72^{H7}	
Width of T-slot (mm / inch)		20^{H7} / 0.79^{H7}	
Width of Guide Block (mm / inch)		22^{h7} / 0.87^{h7}	
Servo Motor Type	FANUC	α22 i	
Gear Ratio		1:180	
Min. Indexing Unit Degree (degree)		0.001°	
Max. R.P.M. (rpm) (motor : 2000 / rpm)		11.1	
Hydro. Clamp Force (kg•m) (P : 20kg / cm^2)		1600	
Indexing Accuracy Class (sec.)		15"	
Repeatability (sec.)	Unidirectional	4"	
	Bidirectional	8"	
Max. Machining Force (kg•m)		350	
N.W. (kgs)		1060	
Max. Load	Vertical 	W=1500 kg	
	Horizontal 	W=3000 kg	

※ GSA remains the right of modification. All specifications can be modified according to customers' requirement.

◎ Servo motor model → Refer to P48
◎ Adapting Tailstock → Refer to P43-45
◎ To match AC- / DC- / Stepping-Controller → Refer to P46
◎ Optional accessories → Refer to P47

GSA+
GSA TECHNOLOGY CO., LTD.

CNCB-800R

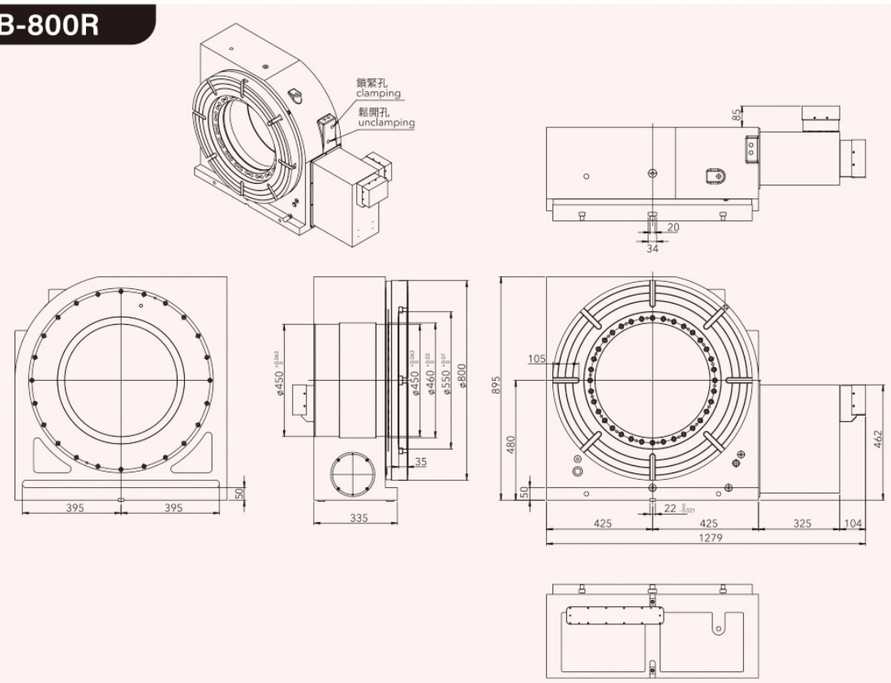

CNCB-800RT

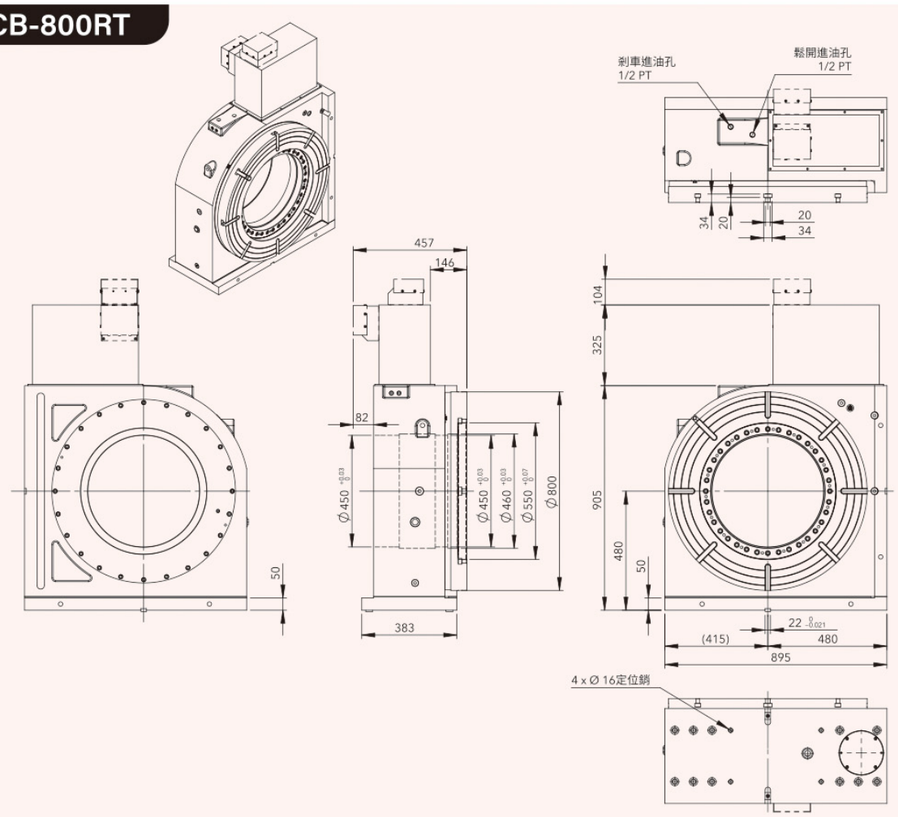

CNC

CNC Rotary Table / Back Mounted Motor Type

CNC-250 RB

- Back-Mounted Motor
- Table Dia.
- Type of CNC Rotary Table

◎ Back-Mounted Motor, avoid the interference with M/C splash guard.
◎ Suitable for small-size of CNC Machining / Tapping-Center.

※ This model can not be installed horizontal position.

ITEM / MODEL		CNC-120RB	CNC-170RB	CNC-200RB	CNC-250RB
Table Dia (mm/inch)		120 / 4.72	170 / 6.69	200 / 7.87	250 / 9.84
Center Height in Vertical (mm / inch)		115 / 4.53	135 / 5.31	160 / 6.3	185 / 7.28
Thru-Hole Dia (mm / inch)		30^{H7} / 1.18^{H7}	35^{H7} / 1.38^{H7}	35^{H7} / 1.38^{H7}	70^{H7} / 2.75^{H7}
Width of T-slot (mm / inch)		10^{H7} / 0.39^{H7}	12^{H7} / 0.47^{H7}	12^{H7} / 0.47^{H7}	12^{H7} / 0.47^{H7}
Width of Guide Block (mm / inch)		14^{h7} / 0.55^{h7}	18^{h7} / 0.71^{h7}	18^{h7} / 0.71^{h7}	18^{h7} / 0.71^{h7}
Servo Motor Type	FANUC	α2 i	α4 i	α4 i	α8 i
Gear Ratio		1:60	1:90	1:90	1:90
Min. Indexing Unit Degree (degree)		0.001°	0.001°	0.001°	0.001°
Max. R.P.M. (rpm) (motor : 2000 / rpm)		33.3	22.2	22.2	22.2
Pneu. Clamp Force (kg•m) (P : 5kg / cm²)		6	25	25	47
Hydro. Clamp Force (kg•m) (P : 20kg / cm²)		12	50	50	94
Indexing Accuracy Class (sec.)		60"	20"	20"	20"
Repeatability (sec.)	Unidirectional	4"	4"	4"	4"
	Bidirectional	8"	8"	8"	8"
Max. Machining Force (kg•m)		12	23	23	45
N.W. (kgs)		70	70	84	124
Max. Load	Vertical 	W=35 kg	W=100 kg	W=125 kg	W=150 kg
	Horizontal 	W=75 kg	W=200 kg	W=250 kg	W=300 kg

※ GSA remains the right of modification. All specifications can be modified according to customers' requirement.

◎ Servo motor model → Refer to P48
◎ Adapting Tailstock → Refer to P43-45
◎ To match AC- / DC- / Stepping-Controller → Refer to P46
◎ Optional accessories → Refer to P47

CNC-170RB

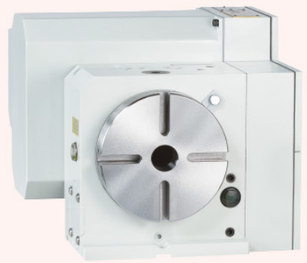

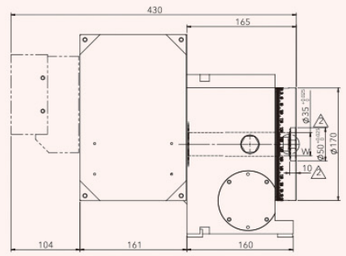

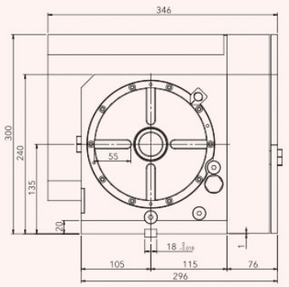

CNC-200RB

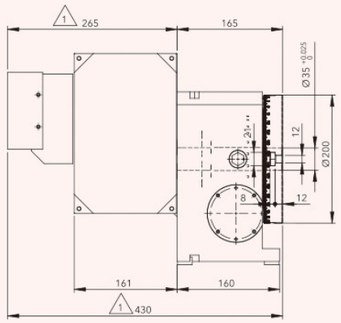

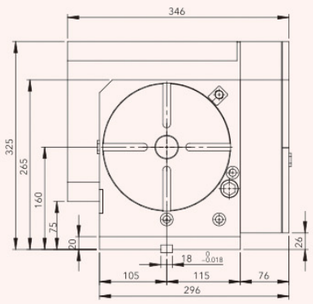

CNC-250RB

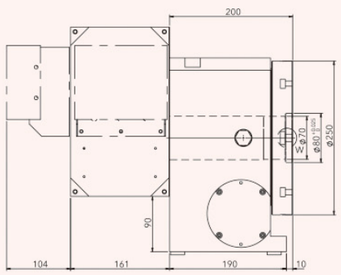

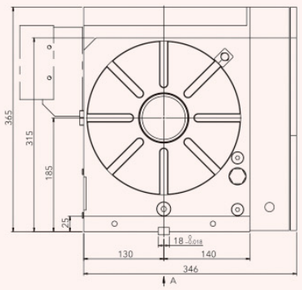

CNC

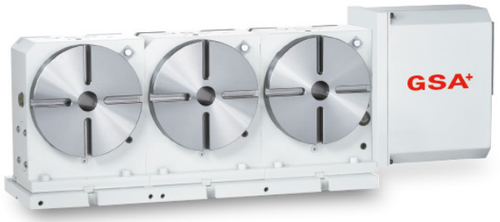

CNC-200R-3W

- Type of CNC Rotary Table
- Table Dia.
- Spindle Numbers

◎ Double productivity, decreasing machining-time and cost.
◎ Multi-Points pneumatic brake system offers superior clamp torque, insures smooth machining without deflection under a heavy load.
◎ Increasing machining speed, reduce the time on rotating ATC and workpiece loading-unloading.

ITEM / MODEL		CNC-120R-2W/3W/4W	CNC-170R-2W/3W/4W	CNC-200R-2W/3W/4W
Table Dia. (mm/inch)		120 / 4.72	170 / 6.69	200 / 7.87
Center Height in Vertical (mm / inch)		115 / 4.53	135 / 5.31	190 / 7.48
Thru-Hole Dia. (mm / inch)		30^{H7} / 1.18^{H7}	35^{H7} / 1.37^{H7}	35^{H7} / 1.38^{H7}
Width of T-slot (mm / inch)		10^{H7} / 0.39^{H7}	12^{H7} / 0.47^{H7}	12^{H7} / 0.47^{H7}
Width of Guide Block (mm / inch)		14^{h7} / 0.55^{h7}	18^{h7} / 0.71^{h7}	18^{h7} / 0.71^{h7}
Servo Motor Type	FANUC	α2 i	α4 i	α8 i
Gear Ratio		1:60	1:90	1:90
Min. Indexing Unit Degree (degree)		0.001°	0.001°	0.001°
Max. R.P.M. (rpm) (motor : 2000 / rpm)		33.3	22.2	22.2
Pneu. Clamp Force (kg•m) (P : 5kg / cm^2)		6	25	25
Hydro. Clamp Force (kg•m) (P : 20kg / cm^2)		12	50	50
Indexing Accuracy Class (sec.)		30"	20"	20"
Repeatability (sec.)	Unidirectional	4"	4"	4"
	Bidirectional	8"	8"	8"
Max. Machining Force (kg•m)		12	23	23
N.W. (kgs)		84	210	270
Max. Load	Vertical (W)	W=35 kg	W=100 kg	W=125 kg
	Horizontal (W)	W=75 kg	W=200 kg	W=250 kg

※ GSA remains the right of modification. All specifications can be modified according to customers' requirement.

◎ Servo motor model → Refer to P48
◎ Adapting Tailstock → Refer to P43-45
◎ To match AC- / DC- / Stepping-Controller → Refer to P46
◎ Optional accessories → Refer to P47

CNC-120R-3W

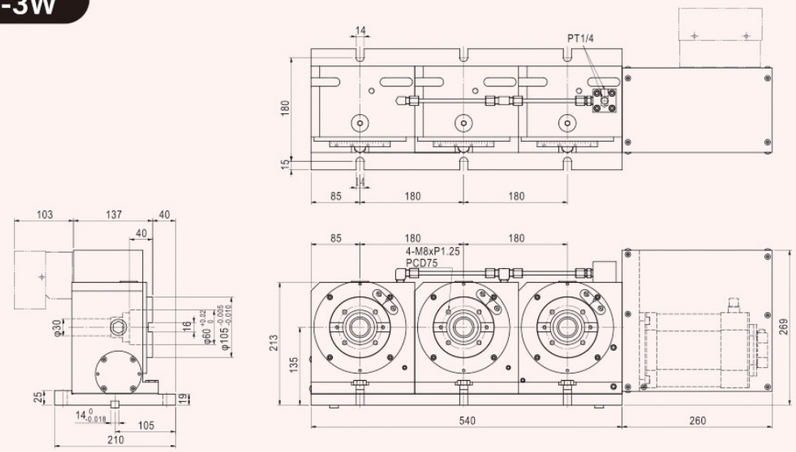

CNC-170R-3W

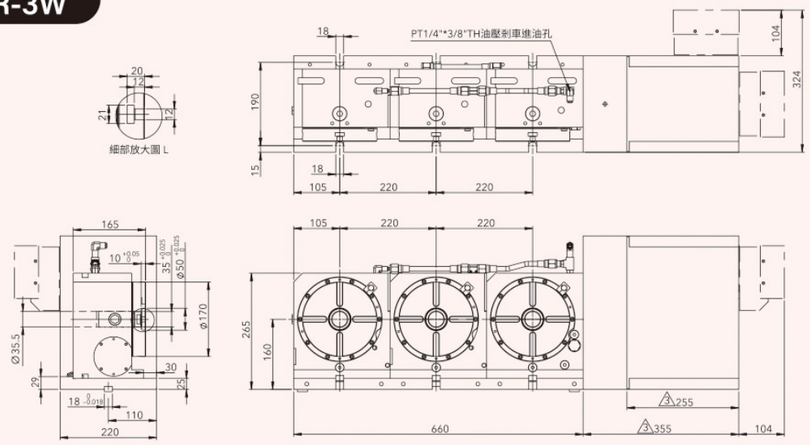

CNC-200R-3W

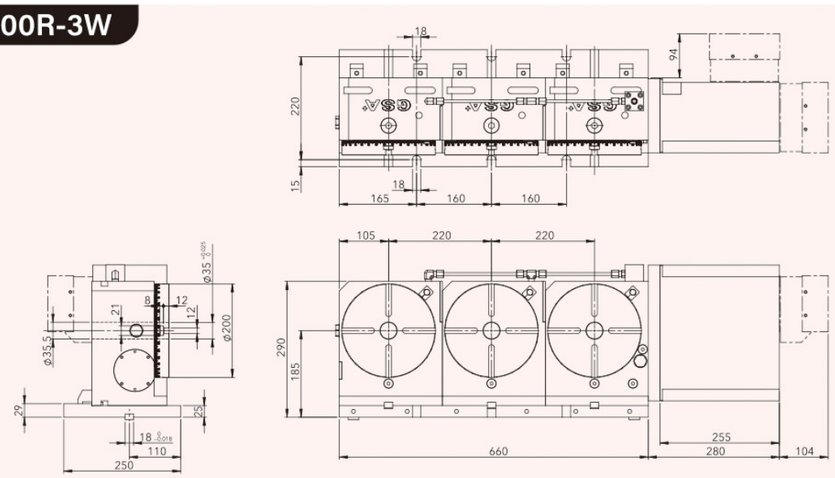

CNC

CNC Tilting Rotary Table

GSA+
GSA TECHNOLOGY CO., LTD.

CNC T-250 A

- Table Dia.
- Dual-Axis
- Type of CNC Rotary Table

- Easy Installation Easy Operation.
- Compact Deign Wide Machinine Range.
- Even Approx. One Meter Table M/C Could be Installed.
- To match 5 axes M/C for continuing machining, the tilting axis could be connected the M-code by using our single axis AC/DC/Stepping servo controller.

ITEM / MODEL		CNCT-100		CNCT-200		CNCT-250A		CNCT-320	
Table Dia. (mm/inch)		120 / 4.72		200 / 7.87		250 / 9.84		320 / 12.60	
Center Height in Vertical (mm / inch)		150 / 5.90		195 / 7.67		225 / 8.85		255 / 10.03	
Thru-Hole Dia. (mm / inch)		30^{H7} / 1.18^{H7}		35^{H7} / 1.38^{H7}		70^{H7} / 2.75^{H7}		110^{H7} / 4.33^{H7}	
Width of T-slot (mm / inch)		10^{H7} / 0.39^{H7}		12^{H7} / 0.47^{H7}		12^{H7} / 0.47^{H7}		14^{H7} / 0.55^{H7}	
Width of Guide Block (mm / inch)		14^{h7} / 0.55^{h7}		18^{h7} / 0.71^{h7}		18^{h7} / 0.71^{h7}		18^{h7} / 0.71^{h7}	
Servo Motor Type		Rotating	Tilting	Rotating	Tilting	Rotating	Tilting	Rotating	Tilting
	FANUC	α2 i	α2 i	α4 i	α8 i	α4 i	α8 i	α8 i	α12 i
Gear Ratio		1:72	1:120	1:90	1:180	1:90	1:180	1:180	1:180
Min. Indexing Unit Degree (degree)		0.001°	0.001°	0.001°	0.001°	0.001°	0.001°	0.001°	0.001°
Max. R.P.M. (rpm) (motor : 2000 / rpm)		27.8	16.7	22.2	11.1	22.2	11.1	11.1	11.1
Pneu. Clamp Force (kg•m) (P : 5kg / cm^2)		6	12	25	25	47	47	71	71
Hydro. Clamp Force (kg•m) (P : 20kg / cm^2)		12	24	50	50	94	94	142	142
Indexing Accuracy Class (sec.)		30"	60"	20"	50"	15"	30"	15"	30"
Repeatability (sec.)		4"	–	4"	–	4"	–	4"	–
Tilting degree		-20°~120°		±110°		±110°		±110°	
N.W. (kgs)		105		240		280		450	
Max. Load	Vertical (W)	W=20 kg		W=50 kg		W=60 kg		W=100 kg	
	Horizontal (W)	W=35 kg		W=100 kg		W=100 kg		W=200 kg	

※ GSA remains the right of modification. All specifications can be modified according to customers' requirement.

- Servo motor model → Refer to P48
- Adapting Tailstock → Refer to P43-45
- To match AC-/DC-/Stepping-Controller → Refer to P46
- Optional accessories → Refer to P47

CNCT-250A

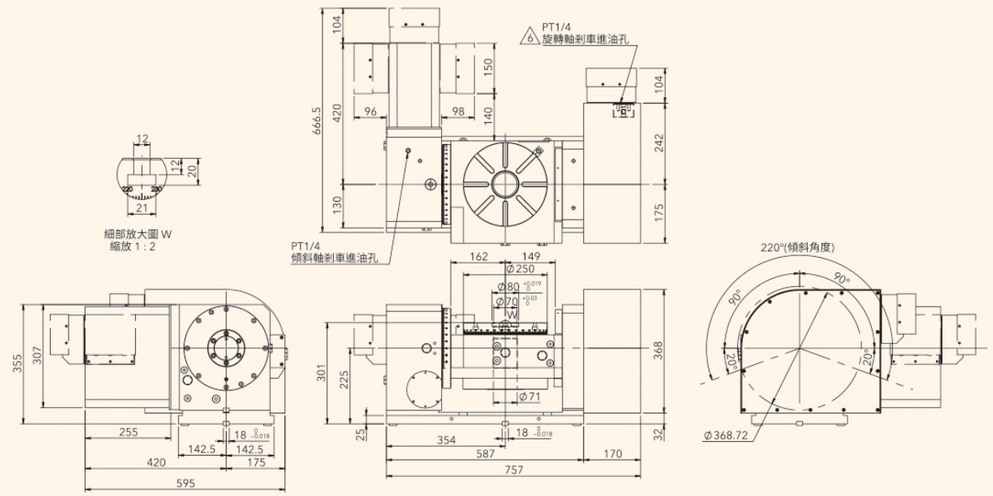

CNCT-320

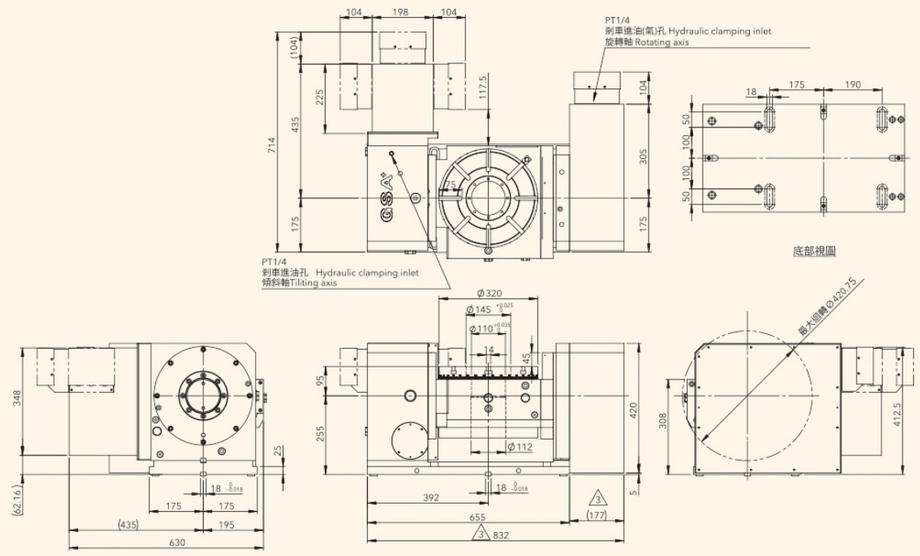

CNCT / CNCTT / CNCMT

GSA+
GSA TECHNOLOGY CO., LTD.

CNC T-320 RS

- Type of CNC Rotary Table
- Dual-Axis
- Table Dia.
- Trunnion Table

◎ Dual-Lead worm wheel and worm shaft design with wear-resisting material suitable for 5 axes simultaneous machining.
◎ Low center height profile design with wide range machining space.
◎ Optional balance pistons provides heavy cutting application and long-term using.

ITEM / MODEL		CNCT-250RS		CNCT-320RS		CNCT-630		CNCT-800	
Table Dia. (mm/inch)		250 / 9.84		320~500 / 12.60~19.67		630 / 31.5		800 / 24.79	
Center Height in Vertical (mm / inch)		285 / 11.21		375 / 14.75		580 / 22.82		650 / 25.57	
Thru-Hole Dia. (mm / inch)		70^{H7} / 2.75^{H7}		145^{H7} / 5.71^{H7}		254^{H7} / 10.0^{H7}		254^{H7} / 10.0^{H7}	
Width of T-slot (mm / inch)		12^{H7} / 0.47^{H7}		14^{H7} / 0.55^{H7}		18^{H7} / 0.71^{H7}		20^{H7} / 0.79^{H7}	
Width of Guide Block (mm / inch)		18^{h7} / 0.71^{h7}		18^{h7} / 0.71^{h7}		22^{h7} / 0.87^{h7}		22^{h7} / 0.87^{h7}	
Servo Motor Type		Rotating	Tilting	Rotating	Tilting	Rotating	Tilting	Rotating	Tilting
	FANUC	α8i / β8i	α8i / β12i	α8 i	α22 i	α22 i	α22 i	α22 i	α30 i
Gear Ratio		1:90	1:180	1:180	1:180	1:180	1:360	1:180	1:720
Min. Indexing Unit Degree (degree)		0.001°	0.001°	0.001°	0.001°	0.001°	0.001°	0.001°	0.001°
Max. R.P.M. (rpm) (motor : 2000 / rpm)		22.2	11.1	11.1	11.1	11.1	5.6	11.1	2.7
Hydro. Clamp Force (kg•m) (P : 20kg / cm²)		110	180	200	280	700	800	1000	1250
Indexing Accuracy Class (sec.)		15"	30"	15"	30"	15"	30"	15"	30"
Repeatability (sec.)	Unidirectional	4"	4"	4"	4"	4"	4"	4"	4"
	Bidirectional	8"	8"	8"	8"	8"	8"	8"	8"
Tilting Degree		±120°		±120°		±120°		±120°	
N.W. (kgs)		1050		1050		2650		4850	
Max. Load	Vertical 	W=100 kg		W=100 kg		W=300 kg		W=600 kg	
	Horizontal 	W=200 kg		W=200 kg		W=500 kg		W=1000 kg	

※ GSA remains the right of modification. All specifications can be modified according to customers' requirement.

◎ Servo motor model → Refer to P48
◎ Adapting Tailstock → Refer to P43-45
◎ To match AC- / DC- / Stepping-Controller → Refer to P46
◎ Optional accessories → Refer to P47

CNCT-320RS

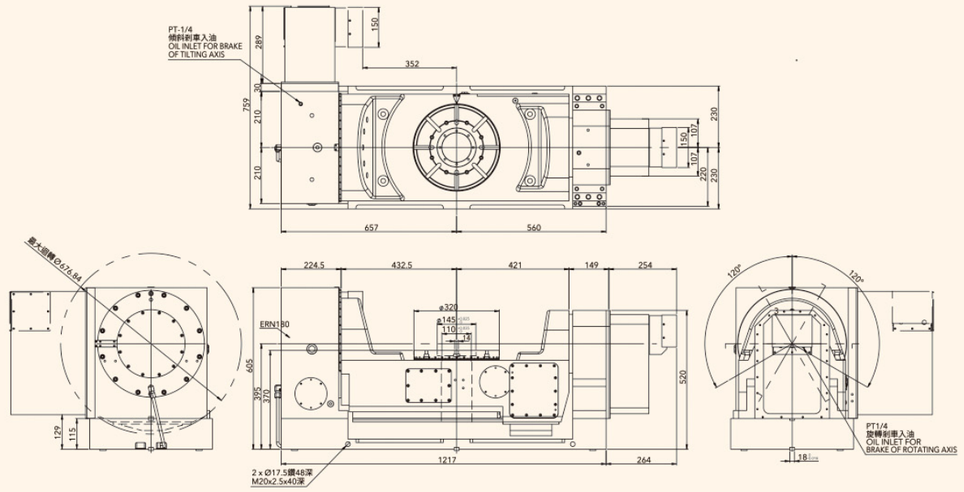

CNCT-630

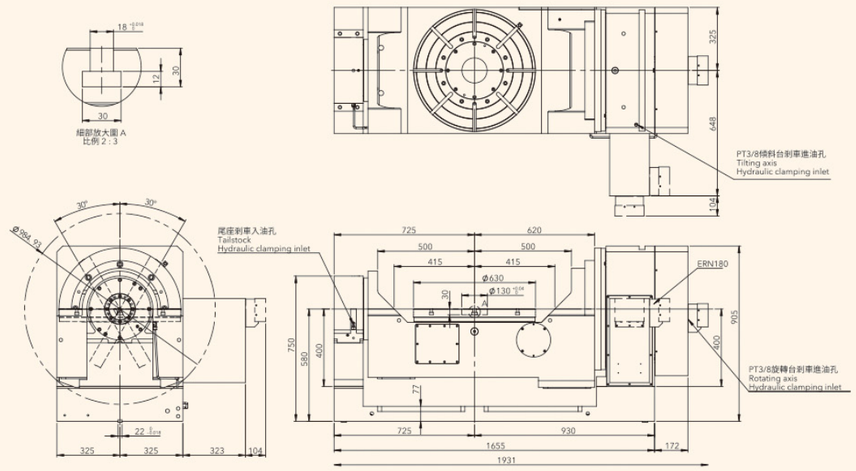

CNC SINGLE ARM Tilting Rotary Table

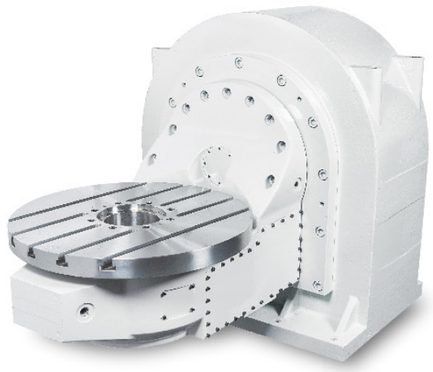

CNC TT-500 SP

- Table Dia.
- Single-Arm
- Type of CNC Rotary Table

◎ Saving space of machine's table
◎ Easy Installation Easy Operation.
◎ Compact Deign Wide Machinine Range.
◎ Even Approx. One Meter Table M/C Could be Installed.
◎ To match 5 axes M/C for continuing machining, the tilting axis could be connected the M-code by using our single axis AC/DC/Stepping servo controller.

ITEM / MODEL		CNCTT-120SP		CNCTT-400SP		CNCTT-500SP	
		Rotating	Tilting	Rotating	Tilting	Rotating	Tilting
Table Dia. (mm/inch)		120 / 4.72	-	400 / 15.74	-	650 / 25.57	-
Center Holes (mm / inch)		30^{H7} / 1.18^{H7}	-	110^{H7} / 4.33^{H7}	-	160^{H7} / 6.30^{H7}	-
Width of T-slot (mm / inch)		10^{H7} / 0.39^{H7}	-	14^{H7} / 0.55^{H7}	-	18^{H7} / 0.71^{H7}	-
Servo Motor Type	FANUC	α2i	α4i	α12is	α22i	α12i	α40i
Gear Ratio		1:60	1:120	1:72	1:90	1:120	1:120
Min. Indexing Unit Degree (degree)		0.001°	0.001°	0.001°	0.001°	0.001°	0.001°
Max. R.P.M. (rpm) (motor : 2000 / rpm)		33.3	16.7	27.7	22.2	16.6	16.6
Pneu. Clamp Force (kg•m) (P:5kg / cm^2)		36	94	200	300	300	500
Hydro. Clamp Force (kg•m) (P:20kg / cm^2)		36	94	200	300	300	500
Indexing Accuracy Class (sec.)		30"	60"	15"	30" (ERN180±15")	15"	30" (ERN180±15")
Repeatability (sec.)	Unidirectional	4"	4"	4"	4"	4"	4"
	Bidirectional	8"	8"	8"	8"	8"	8"
Tilting Degree		-	±120°	±110°		±110°	
N.W. (kgs)		150		700		1170	
Max. Load (kg)	0°	35	-	200	-	300	-
	90°	20	-	150	-	200	-

※ GSA remains the right of modification. All specifications can be modified according to customers' requirement.

◎ Servo motor model → Refer to P48
◎ Adapting Tailstock → Refer to P43-45
◎ To match AC-/DC-/Stepping-Controller → Refer to P46
◎ Optional accessories → Refer to P47

GSA+
GSA TECHNOLOGY CO., LTD.

CNCTT-500SP

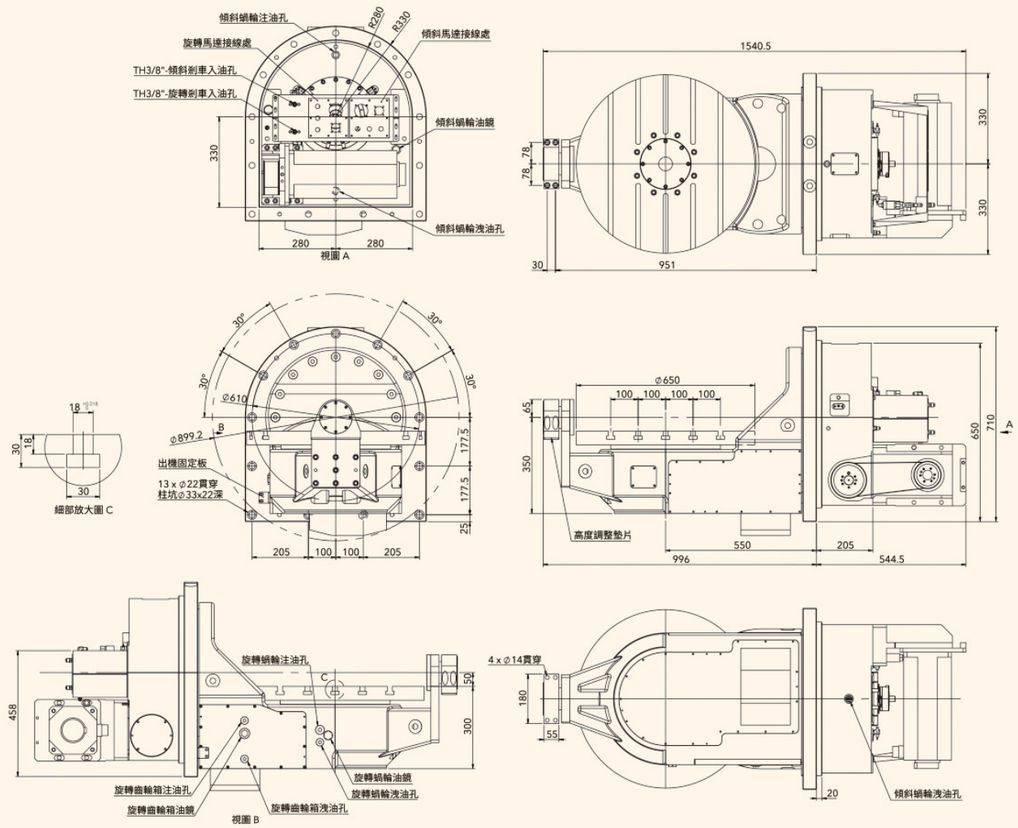

CNCT / CNCTT / CNCMT

CNC Manual Tilting Rotary Table

GSA+
GSA TECHNOLOGY CO., LTD.

CNCMT-250 RR

- CNCMT: Type of Manual Tilting Rotary Table
  TNC: Type of Tilting Dividing Head
- Table Dia.
- Motor Position

◎ Suitable for conventional Milling, Boring and Tapping Machine.
◎ Suitable to E.D.M. machine, for machining workpieces of wheel-moulding machine of bicycle, motorcycle.
◎ Manual tilting, Rotating by CNC control.

ITEM / MODEL		CNCMT-200		CNCMT-250		CNCMT-320		CNCMT-400		CNCMT-500		CNCMT-630	
Table Dia. (mm/inch)		ø200 / ø7.87		ø250 / ø9.84		ø320 / ø12.60		ø400 / ø15.74		ø500 / ø19.67		ø630 / ø24.79	
Center Height in Vertical (mm / inch)		190 / 7.48		210 / 8.26		270 / 10.62		290 / 11.41		330 / 12.98		440 / 17.31	
Thru-Hole Dia. (mm / inch)		30^{H7}/ 1.18^{H7}		70^{H7} / 2.75^{H7}		110^{H7} / 4.33^{H7}		150^{H7} / 5.90^{H7}		180^{H7} / 7.08^{H7}		254^{H7} / 10.0^{H7}	
Width of T-slot (mm / inch)		12^{H7}/ 0.47^{H7}		12^{H7}/ 0.47^{H7}		14^{H7}/ 0.55^{H7}		14^{H7}/ 0.55^{H7}		18^{H7} / 0.71^{H7}		18^{H7} / 0.71^{H7}	
Width of Guide Block (mm / inch)		18^{h7}/ 0.71^{h7}		18^{h7}/ 0.71^{h7}		18^{h7}/ 0.71^{h7}		18^{h7}/ 0.71^{h7}		18^{h7}/ 0.71^{h7}		18^{h7}/ 0.71^{h7}	
Servo Motor Type		Rotating	Tilting (Scale)	Rotating	Tilting (Scale)	Rotating	Tilting (Scale)	Rotating	Tilting (Scale)	Rotating	Tilting (Scale)	Rotating	Tilting (Scale)
	FANUC	α4 i	Manual	α4 i	Manual	α12 i	Manual	α12 i	Manual	α12 i	Manual	α22 i	Manual
Gear Ratio		1:90	-	1:90	-	1:180/1:90	-	1:90	-	1:120	-	1:180	-
Min. Indexing Unit Degree (degree)		0.001°	1°	0.001°	1°	0.001°	1°	0.001°	1°	0.001°	1°	0.001°	1°
Max. R.P.M. (rpm) (motor : 2000 / rpm)		22.2	-	22.2	-	11.1/22.2	-	22.2	-	16.7	-	11.1	-
Pneu. Clamp Force (kg•m) (P:5kg / cm²)		25	-	47	-	71	-	92	-	125	-	350	-
Hydro. Clamp Force (kg•m) (P:20kg / cm²)		50	-	94	-	142	-	184	-	250	-	700	-
Indexing Accuracy Class (sec.)		20"	-	15"	-	15"	-	15"	-	15"	-	15"	-
Repeatability (sec.)	Unidirectional	4"	-	4"	-	4"	-	4"	-	4"	-	4"	-
	Bidirectional	8"	-	8"	-	8"	-	8"	-	8"	-	8"	-
Tilting Degree		0°~105°		0°~100°		0°~100°		0°~100°		0°~100°		0°~100°	
N.W. (kgs)		135		220		310		380		450		1000	
Max. Load	Vertical 	W=40 kg		W=125 kg		W=150 kg		W=300 kg		W=350 kg		W=400 kg	
	Horizontal 	W=80 kg		W=300 kg		W=350 kg		W=500 kg		W=600 kg		W=800 kg	

※ GSA remains the right of modification. All specifications can be modified according to customers' requirement.

◎ Servo motor model → Refer to P48
◎ Adapting Tailstock → Refer to P43-45
◎ To match AC-/DC-/Stepping-Controller → Refer to P46
◎ Optional accessories → Refer to P47

CNCMT-250

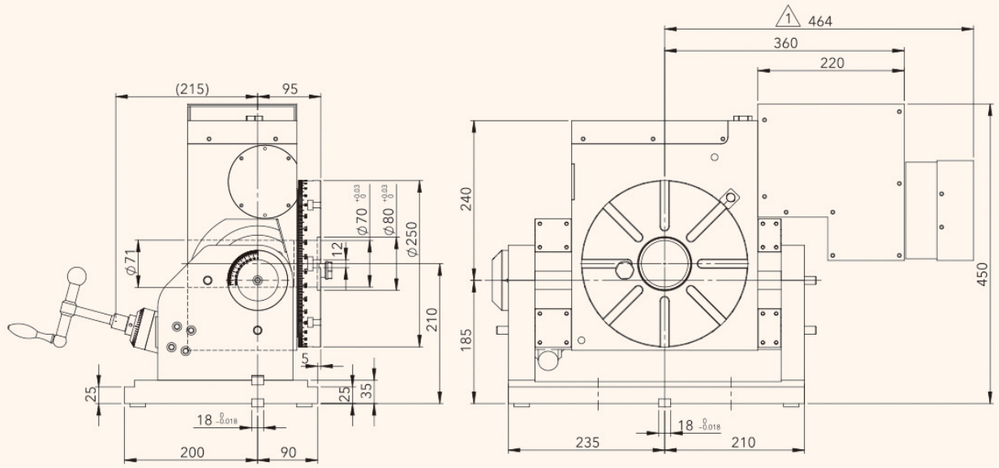

CNCMT-400

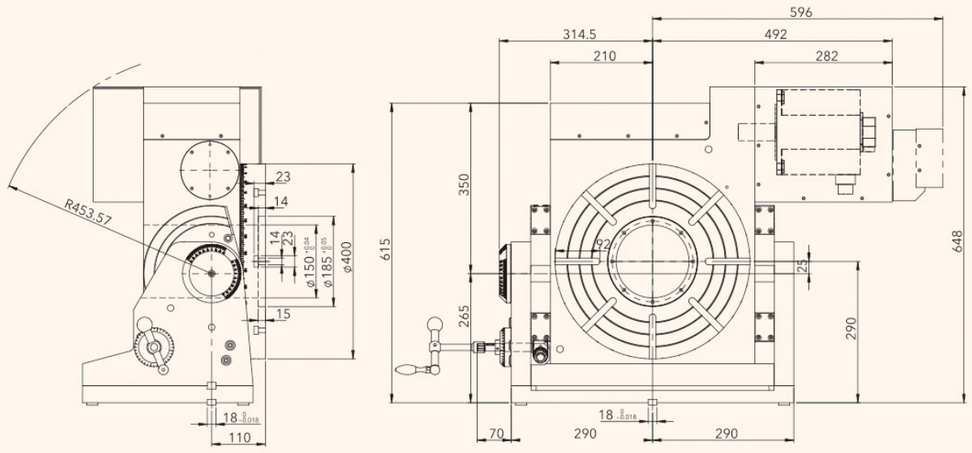

CNCT / CNCTT / CNCMT

NC Face Gear Indexer

NCF-250

Table Dia.

Type of NC Face Gear Indexer

3 PCS hirth coupling

- Build-in 3pcs hirtn coupling, ensure the indexing accuracy +/- 5 sec.
- Could be direct connected to the 4th. axis on machining-center. Also could be connected the M-code by useing G.S. single axis AC/DC/Stepping servo controller.
- Compact design, adapting precision bearing, ensure rigidity and long-term operation.
- Build-in 3 pieces hirth coupling, table will not lifting-up during rotating.

ITEM / MODEL		NCF-250R	NCF-320R	NCF-400R	NCF-500R
Table Dia. (mm/inch)		ø250 / ø9.84	ø320 / ø12.6	ø400 / ø15.75	ø500 / ø19.69
Center Height in Vertical (mm / inch)		185 / 7.28	210 / 8.27	250 / 9.83	310 / 12.21
Thru-Hole Dia. (mm / inch)		30^{H7}/ 1.8^{H7}	80^{H7}/ 3.15^{H7}	70^{H7}/ 2.76^{H7}	80^{H7}/ 3.15^{H7}
Width of T-slot (mm / inch)		12^{H7}/ 0.47^{H7}	14^{H7}/ 0.55^{H7}	14^{H7}/ 0.55^{H7}	14^{H7}/ 0.55^{H7}
Width of Guide Block (mm / inch)		18^{h7}/ 0.71^{h7}	18^{h7}/ 0.71^{h7}	18^{h7}/ 0.71^{h7}	18^{h7}/ 0.71^{h7}
Servo Motor Type	FANUC	α8 i	α12 i	α12 i	α12 i
Gear Ratio		1:90	1:90	1:90	1:180
Min. Indexing Unit Degree (degree)		1° or 5°	1° or 5°	1° or 5°	1° or 5°
Max. R.P.M. (rpm) (motor : 2000 / rpm)		22.2	22.2	22.2	11.1
Repeatability (sec.)	Unidirectional	1"	1"	1"	1"
	Bidirectional	2"	2"	2"	2"
N.W. (kgs)		110	240	280	320
Clamp Torque (kg•m)		500	500	600	700
Load Capacity in Vertical (with tailstock) (kgs)		250	300	500	700
Max. Load	Vertical (W)	W=125 kg	W=150 kg	W=250 kg	W=350 kg
	Horizontal (W)	W=300 kg	W=350 kg	W=500 kg	W=600 kg

※ GSA remains the right of modification. All specifications can be modified according to customers' requirement.

- Servo motor model → Refer to P48
- Adapting Tailstock → Refer to P43-45
- To match AC-/DC-/Stepping-Controller → Refer to P46
- Optional accessories → Refer to P47

NCF-250R

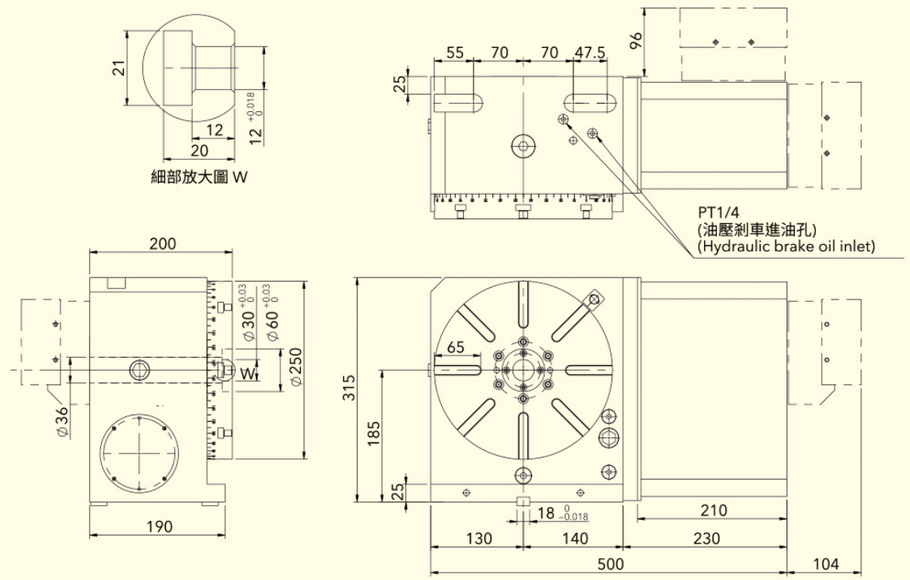

NCF-400R

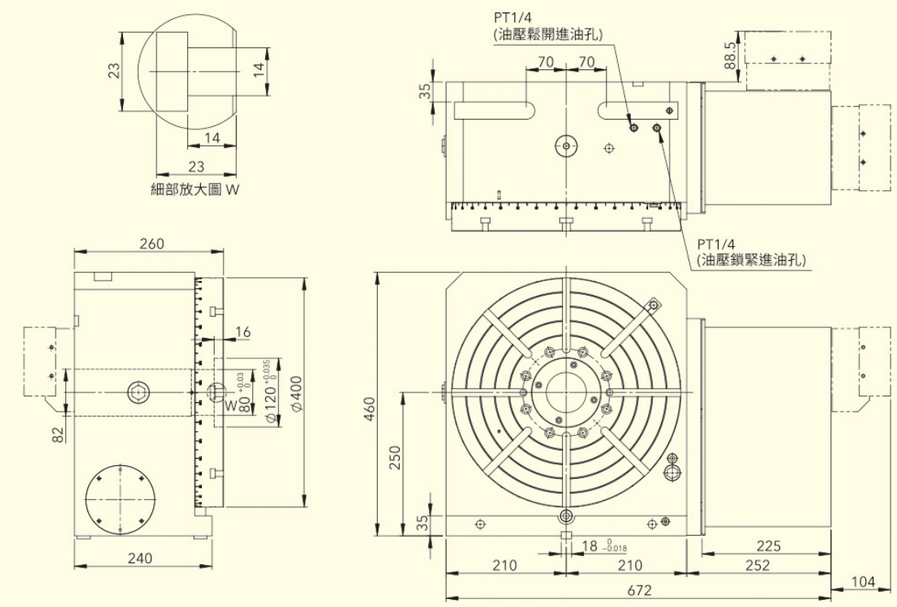

NCF

Roller Gear Cam - Rotary Table

RCT-200 R

- Motor Position at Right-Side
- Table Dia.
- Type of Roller Gear Cam - Rotary Table

◎ With Zero-Backlash roller drive technology.
◎ Hith-Speed operation & Lowest indexing cycle time.
◎ High Rigidity and High Durability.
◎ Imported from Japan.

ITEM / MODEL		RCT-170R	RCT-200R	RCT-250R	RCT-320R
Table Dia. (mm/inch)		170 / 6.69	200 / 7.87	250 / 9.84	320 / 12.60
Center Height in Vertical (mm / inch)		135 / 5.31	160 / 6.3	185 / 7.28	210 / 8.27
Thru-Hole Dia. (mm / inch)		35^{H7}/ 1.38^{H7}	35^{H7}/ 1.38^{H7}	70^{H7}/ 2.75^{H7}	80^{H7} / 3.15^{H7}
Width of T-slot (mm / inch)		12^{H7}/ 0.47^{H7}	12^{H7}/ 0.47^{H7}	12^{H7}/ 0.47^{H7}	14^{H7} / 0.55^{H7}
Width of Guide Block (mm / inch)		18^{h7} / 0.71^{h7}	18^{h7} / 0.71^{h7}	18^{h7} / 0.71^{h7}	18^{h7} / 0.71^{h7}
Servo Motor Type	FANUC	α4 i	α4 i	α8 i	α8 i
Gear Ratio		1:30	1:40	1:40	1:60
Min. Indexing Unit Degree (degree)		0.001°	0.001°	0.001°	0.001°
Max. R.P.M. (rpm) (motor : 2000 / rpm)		66.6	50	50	33.3
Pneu. Clamp Force (kg•m) (P:5kg / cm^2)		25	25	45	71
Hydro. Clamp Force (kg•m) (P:20kg / cm^2)		50	50	90	142
Indexing Accuracy Class (sec.)		20"	20"	20"	20"
Repeatability (sec.)		4"	4"	4"	4"
Max. Machining Force (kg•m)		25	25	60	80
N.W. (kgs)		65	80	120	200
Max. Load	Vertical (W)	W=75 kg	W=75 kg	W=100 kg	W=150 kg
	Horizontal (W)	W=150 kg	W=150 kg	W=250 kg	W=350 kg

※ GSA remains the right of modification. All specifications can be modified according to customers' requirement.

◎ Servo motor model → Refer to P48
◎ Adapting Tailstock → Refer to P43-45
◎ To match AC- / DC- / Stepping-Controller → Refer to P46
◎ Optional accessories → Refer to P47

GSA+
GSA TECHNOLOGY CO., LTD.

RCT-200R

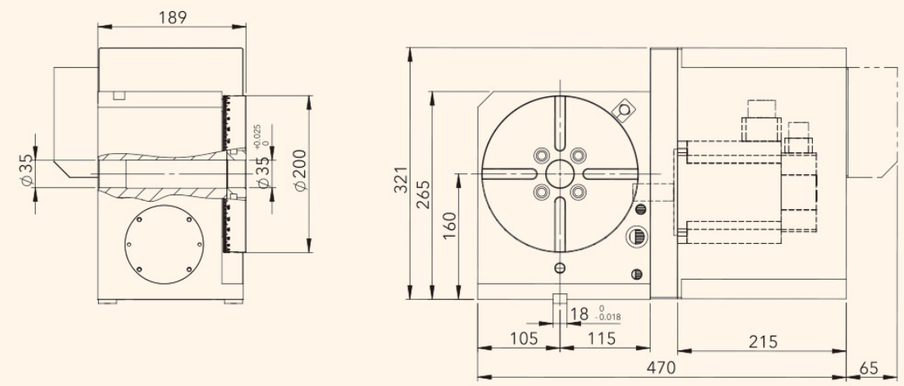

RCT-250R

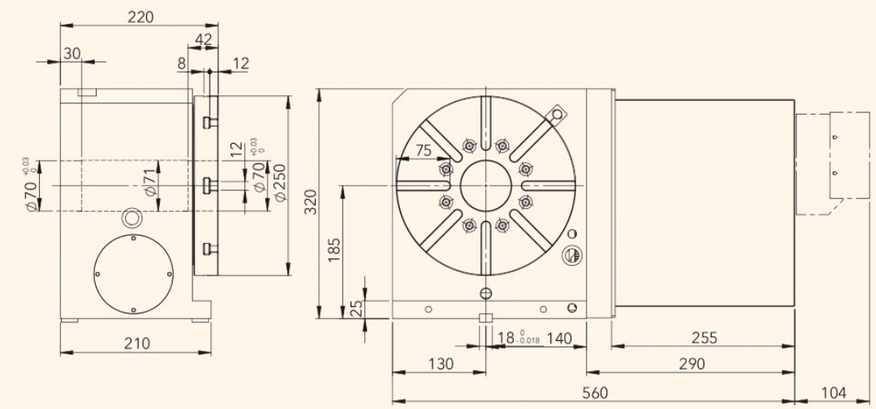

RCT-320R

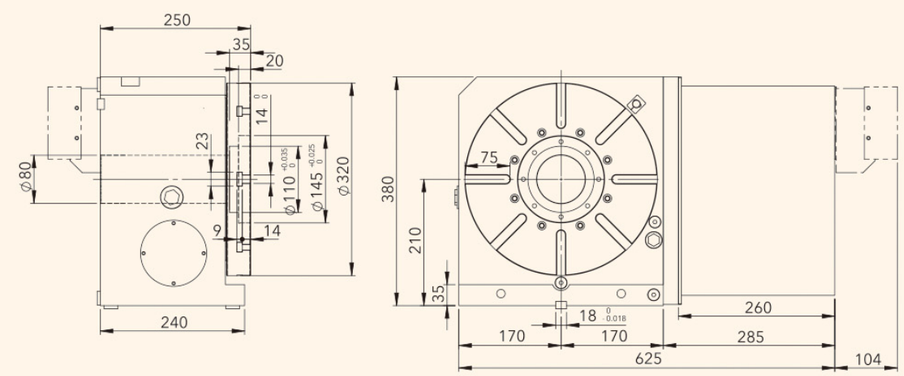

RCT / SLR / SFB

Roller Gear Cam - CNC Trunnion Table

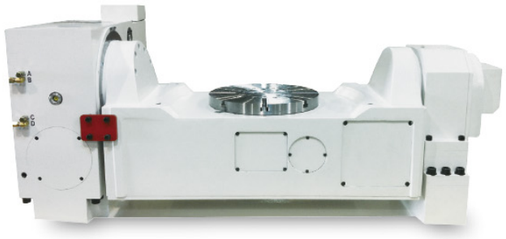

RCTT-350 RS

- Type of Roller Gear Cam - CNC Trunnion Table
- Dual-Axis
- Table Dia.
- Trunnion Table

◎ With Zero-Backlash roller drive technology.
◎ Hith-Speed operation & Lowest indexing cycle time.
◎ High Rigidity and High Durability.
◎ Imported from Japan.

ITEM / MODEL		RCTT-350	
Table Dia. (mm/inch)		350 / 13.77	
Center Height in Vertical (mm / inch)		410 / 16.13	
Thru-Hole Dia. (mm / inch)		100^{H7} / 3.93^{H7}	
Width of T-slot (mm / inch)		12^{H7} / 0.47^{H7}	
Width of Guide Block (mm / inch)		18^{h7} / 0.71^{h7}	
Servo Motor Type		Rotating	Tilting
	FANUC	α8 i	α22 i
Gear Ratio		1:72	1:90
Min. Indexing Unit Degree (degree)		0.001°	0.001°
Max. R.P.M. (rpm) (motor : 2000 / rpm)		41.6	33.3
Pneu. Clamp Force (kg•m)		150	200
Hydro. Clamp Force (kg•m)		150	200
Indexing Accuracy Class (sec.)		20"	30" (With Encoder ERN 180 : 30")
Repeatability (sec.)		4"	-
Tilting Degree		±120°	
N.W. (kgs)		1060	
Max. Load	Vertical 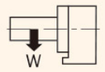	W=300 kg	
	Horizontal 	W=500 kg	

※ GSA remains the right of modification. All specifications can be modified according to customers' requirement.

◎ Servo motor model → Refer to P48
◎ Adapting Tailstock → Refer to P43-45
◎ To match AC-/DC-/Stepping-Controller → Refer to P46
◎ Optional accessories → Refer to P47

GSA+
GSA TECHNOLOGY CO., LTD.

RCTT-350RS

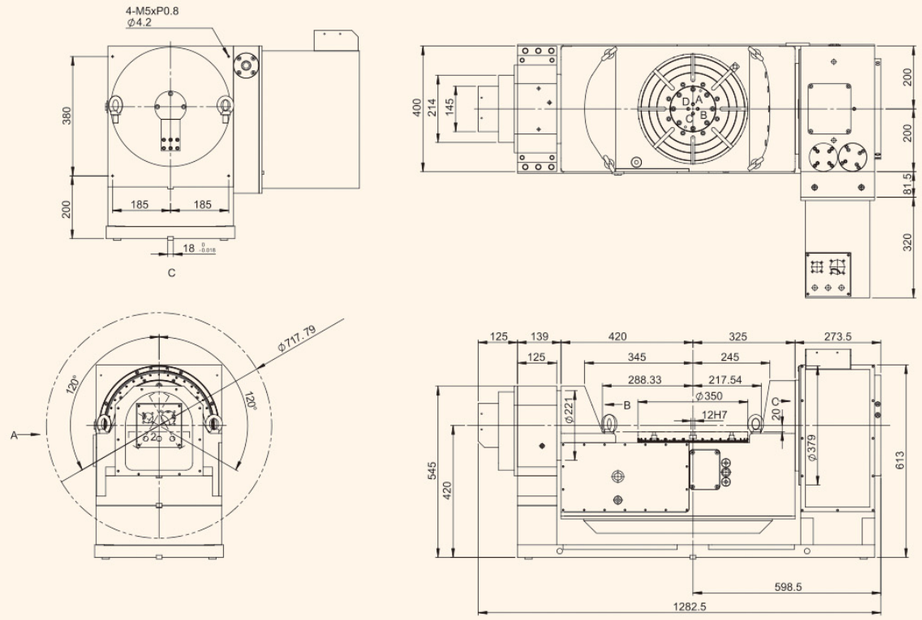

RCTT-350RB

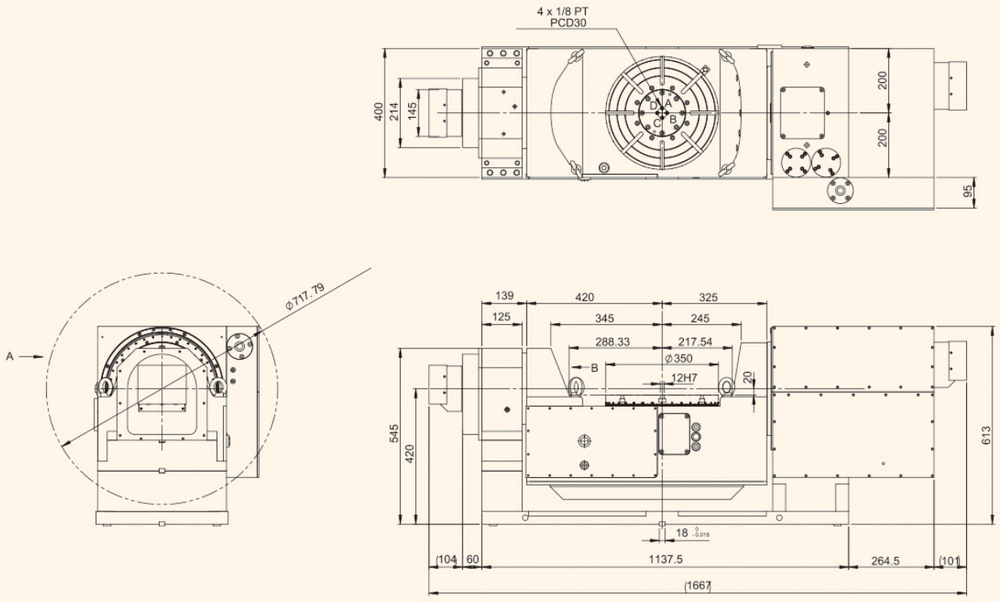

Roller Gear Cam drive / Swing Head

SLR-175

Center Dist. of Roller Gear

Type of Swing Head – Roller Gear Cam drive

◎ With Zero-Backlash roller drive technology.
◎ Hith-Speed operation & Lowest indexing cycle time.
◎ High Rigidity and High Durability.
◎ Imported from Japan.

ITEM / MODEL		SLR-175
Center Holes (mm / inch)		180H7 / 7.08H7
Thru-Hole Dia. (mm / inch)		100H7 / 3.93H7
Servo Motor Type	FANUC	α22 i
Gear Ratio		1:90
Min. Indexing Unit Degree (degree)		0.001°
Max. R.P.M. (rpm) (motor : 2000 / rpm)		22.2
Hydro. Clamp Force (kg•m) (P:20kg / cm²)		250
Max. Machining Force (kg•m)		160
Indexing Accuracy Class (sec.)		15"
Repeatability (sec.)	Unidirectional	2"
	Bidirectional	4"
Tilting Degree		±120°
N.W. (kgs)		300

Roller Gear Cam drive / Build-In Table

HRC-500

Table Dia.

Type of Build-In Table – Roller Gear Cam drive

ITEM / MODEL		HRC-500
Table Dia. (mm/inch)		Ø600 / Ø23.61
Center Holes (mm / inch)		Ø50H7 x 10 deep / Ø1.97H7 x 0.39 deep
Overall Hight (mm / inch)		363
Servo Motor Type	FANUC	α22 i
Gear Ratio		1:150
Max. R.P.M. (rpm) (motor : 2000 / rpm)		13.3
Min. Indexing Unit degree (degree)		0.001°
Angle Encoder	HEIDENHAIN	RCN 2390F±5"
Indexing Accuracy Class (sec.)		10"
Repeatability (sec.)	Unidirectional	2"
	Bidirectional	4"
Hydraulic Source (kg/cm²)		35
Clamping Torque (kgf•m)		210
Max. Loading (kg)		600

※ GSA remains the right of modification. All specifications can be modified according to customers' requirement.

◎ Servo motor model → Refer to P48
◎ To match AC-/DC-/Stepping-Controller → Refer to P46
◎ Optional accessories → Refer to P47

SLR-175

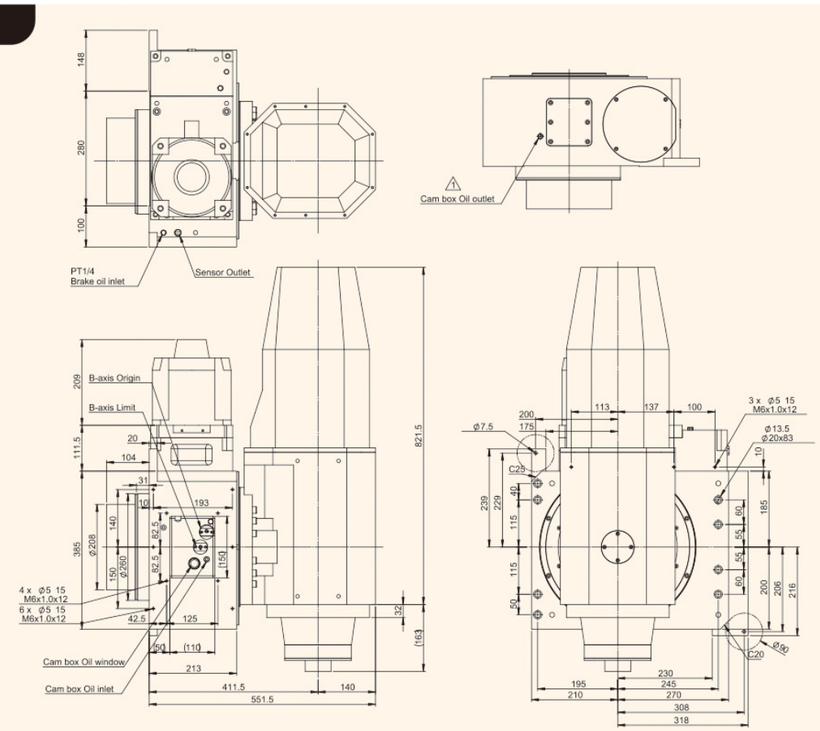

HRC-500

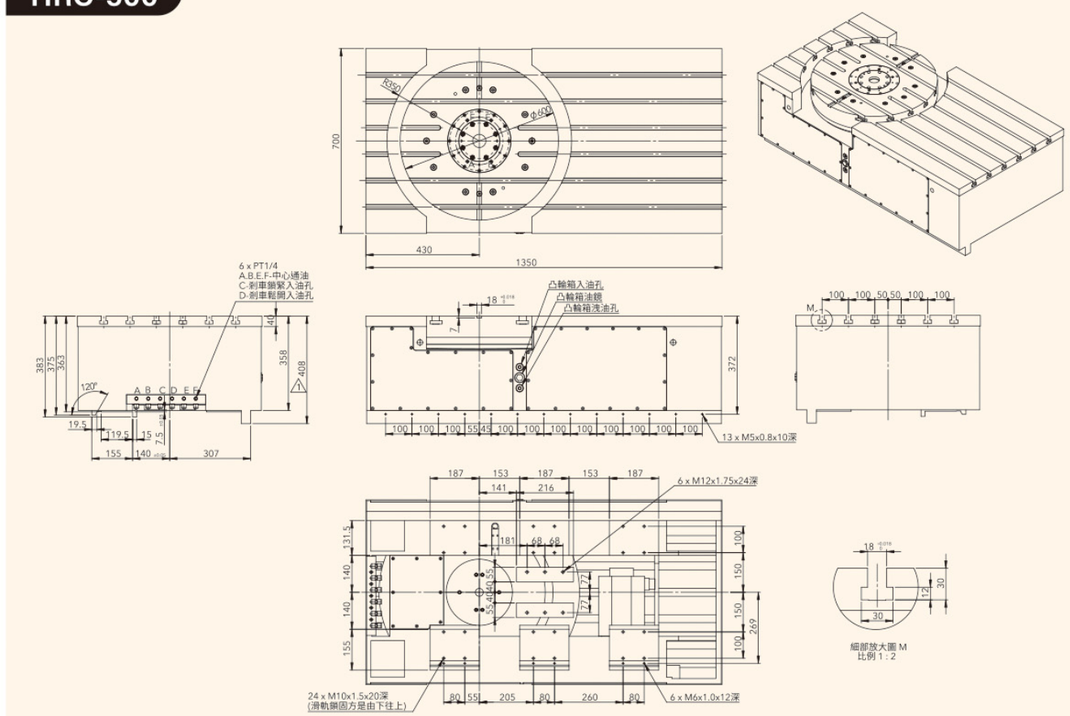

RCT / SLR / HRC

Horizontal Rotary / Index Center Table

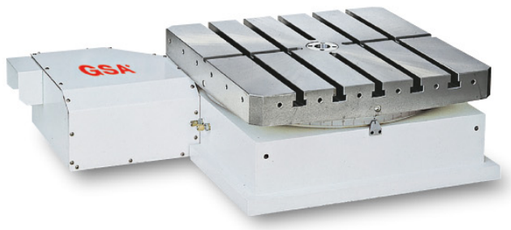

HIT-800 S1

- Table Dia.
- Type of Horizontal Rotary / Index Center Table

◎ Suitable for Horizontal Machining Center.
◎ Rotating Speed can be reached 33.3 RPM.
◎ Adapting A special anti-wearing/rigid alloy of bronze/nickel worm wheel and hardened steel worm screw ensure long term indexing accuracy.
◎ Double powerful brake system with large size of clamping contact surface suitable for heavy cutting.
◎ Adapting 2 pcs or 3 pcs Hirth Coupling for positioning, Repeatability can be reached +/- 0.5 sec Besides accuracy will not be changed even oper ation times increasing.
◎ Indexing Accuracy according to customer's requirement: +/- 2 sec. or +/- 3 sec.
◎ All units in Tables are manufactured from high quality materials and workmanship. Every Table has Running/Accuracy testing for at least 48 hours. All electrical parts are imported from Japan/Germany for performance confidence.

ITEM / MODEL		HIT-500S1	HIT-630S1	HIT-800S1	HIT-1000S1
Table Size LxW (mm / inch)		500 x 500 / 19.67 x 19.67	630 x 630 / 24.79 x 24.79	800 x 800 / 31.48 x 31.48	1000 x 1000 / 39.35x39.35
Over All Height (mm / inch)		305 / 12.0	315 / 12.39	340 / 13.38	380 / 14.95
Center Holes (mm / inch)		50^{H7} / 1.97^{H7}	50^{H7} / 1.97^{H7}	65^{H7} / 1.97^{H7}	50^{H7} / 2.56^{H7}
Width of T-slot (mm / inch)		14^{H7} / 0.55^{H7}	18^{H7} / 0.71^{H7}	18^{H7} / 0.71^{H7}	22^{H7} / 0.87^{H7}
Clamping / Unclamping		Hydro. 35kg/cm²	Hydro. 35kg/cm²	Hydro. 35kg/cm²	Hydro. 35kg/cm²
Servo Motor Type	FANUC	α12 i / α22 i	α22 i	α22 i	α22 i / α30 i
Gear Ratio		1:90	1:180	1:180	1:180
Max. R.P.M. (rpm) (motor : 2000 / rpm)		22.2	11.1	11.1	11.1
Min. Indexing Unit Degree (degree)		1° or 5°	1° or 5°	1° or 5°	1°
Indexing Accuracy Class (sec.)		6"	6"	6"	6"
Max. Loading Weight (kgs) (Evenly Distributed)		1000	2000	3000	5000
Clamping Force (kg)		5495	12000	14000	18000
Weight.(kgs)		325	360	525	1360

※ GSA remains the right of modification. All specifications can be modified according to customers' requirement.

◎ Servo motor model → Refer to P48
◎ To match AC-/DC-/Stepping-Controller → Refer to P46
◎ Optional accessories → Refer to P47

GSA+
GSA TECHNOLOGY CO., LTD.

HIT-800S1

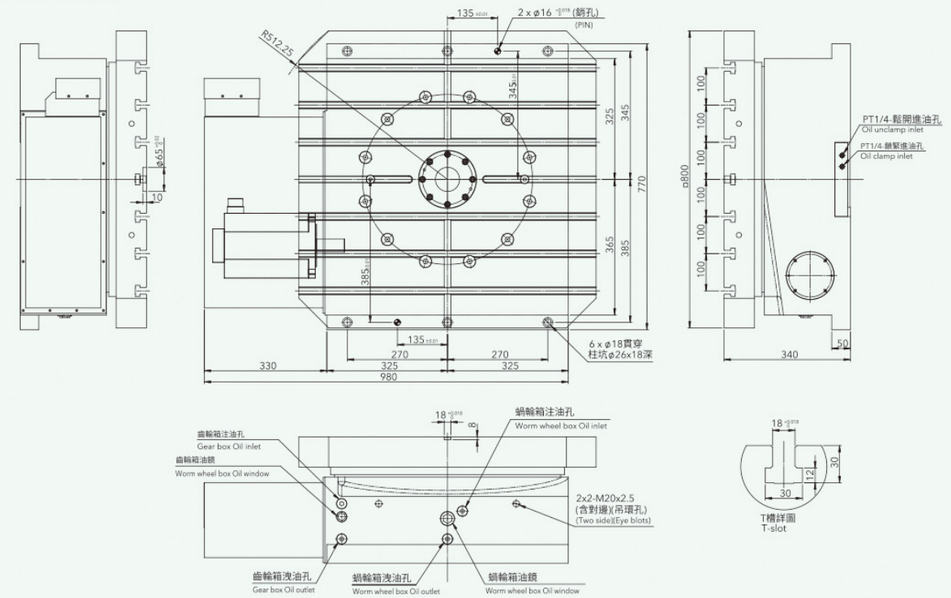

HIT-1000S1

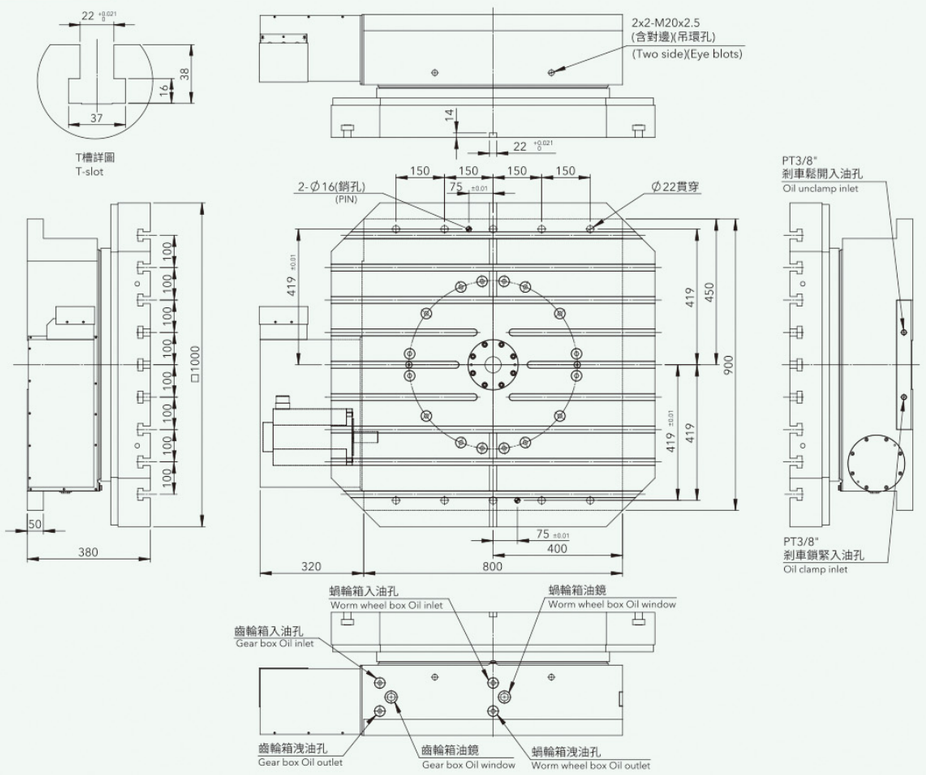

HIT / HRT

Direct Drive Motor-Rotary Table

DD R 175-50 A

- DD: Type of Direct Drive
- R: R: Rotary Table / T: Tilting Heads / H: Horizontal / RF: 5-Axis
- 175-50: Type of Torque Motor
- A: A: Nature / W: Coolant / S: High Speed

◎ Machine tools, semiconductor equipment, LCD, and electronic manufacturing equipment are trending towards integration, high precision, and miniaturization. The use of direct drive is becoming increasingly prevalent in these applications.
◎ Future market trends include positioning, grinding, dual-axis, dual-axis synchronization, and two-axis head processing applications.

◎ Users can choose the appropriate motor based on their specific requirements.
◎ Utilizing domestically produced direct drive motors can support vertical integration in the industrial production of machinery, modules, and systems.
◎ Modularization of mechanical equipment offers greater flexibility, simplifies the manufacturing and maintenance processes, reduces costs, and facilitates quicker delivery and installation. This enables businesses to respond more effectively to market changes and enhance competitiveness.

MOTOR MAKER			GSA	GSA	GSA	GSA	GSA	GSA	GSA	GSA
MOTOR TYPE			DD175-50	DD175-50	DD210-50	DD210-50	DD210-70	DD210-70	DD210-100	DD210-100
Power Voltage, AC			220V	220V	220/380V	220/380V	220/380V	220/380V	220/380V	220/380V
Cooling condition			Free Air convection	Water cooling	Free Air convection	Water cooling	Free Air convection	Water cooling	Free Air convection	Water cooling
1	Tp, Peak torque	Nm	83	113	120	200	150	300	230	440
2	Tc, Continuous torque	Nm	28	52	47	115	60	160	93	245
3	Ip, Peak current	Arms	12	18	14	28	14	28	28	56
4	Ic, Continuous current	Arms	4	7.5	4.3	11.7	4.3	11.7	8.4	23
5	Np, Max. speed	r/min	250	200	200/400	200/400	150/300	150/300	200/400	150/300
6	Ns, Continuous speed	r/min	150	120	120/240	100/200	100/200	50/100	120/240	80/150
7	Pc, Continuous rated output power	W	400	660	500/750	1500/2200	800/1000	2200/3000	1168/2400	2200/4000
8	Ploss, Max continuous power dissipation	W	260	775	350	2000	450	2800	570	4000
9	Indexing Accuracy	sec.	±10	±10	±7.5	±7.5	±7.5	±7.5	±7.5	±7.5
10	Repeatability	sec.	±2	±2	±1.5	±1.5	±1.5	±1.5	±1.5	±1.5
11	Pneumatic Pressure Supply	kg/cm²	5	5	5	5	5	5	5	5
12	Clamping Torque	Nm	46	46	60	60	60	60	60	60
13	MAX. Loading Capacity of workpiece	kg	14	26	19	46	24	64	37	98

MOTOR MAKER			GSA	GSA	GSA	GSA	GSA	GSA	GSA	GSA
MOTOR TYPE			DD291-100	DD291-100	DD360-100	DD360-100	DD450-100	DD450-100	DD532-70	DD532-70
Power Voltage, AC			220/380V	220/380V	220/380V	220/380V	AC380V	AC380V	AC380V	AC380V
Cooling condition			Free Air convection	Water cooling	Free Air convection	Water cooling	Free Air convection	Water cooling	Free Air convection	Water cooling
1	Tp, Peak torque	Nm	400	800	700	1150	1050	2300	1240	2330
2	Tc, Continuous torque	Nm	190	455	345	780	525	1225	596	1240
3	Ip, Peak current	Arms	15	35	26	50	24	56	25	50
4	Ic, Continuous current	Arms	7.12	17.6	12.8	30	12	28	12	25
5	Np, Max. speed	r/min	120/240	40/110	80/180	40/100	120	80	100	80
6	Ns, Continuous speed	r/min	80/160	20/80	60/140	20/60	80	50	70	50
7	Pc, Continuous rated output power	W	1605/3210	992/3968	2177/5080	1633/4900	4400	6415	1202	6500
8	Ploss, Max continuous power dissipation	W	693	3912	1228	6384	1210	5858	4371	4657
9	Indexing Accuracy	sec.	±5	±5	±3	±3	±3	±3	±3	±3
10	Repeatability	sec.	±1.5	±1.5	±1.5	±1.5	±1.5	±1.5	±1.5	±1.5
11	Pneumatic Pressure Supply	kg/cm²	5	5	5	5	5	5	5	5
12	Clamping Torque	Nm	200	200	730	730	1600/Oil pressure	1600/Oil pressure	2700/Oil pressure	2700/Oil pressure
13	MAX. Loading Capacity of workpiece	kg	63	151	86	192	105	245	98	205

MOTOR TYPE	Diameter(D) mm	Total height(H) mm	Width(L) mm	Bottom height(h) mm	Bottom width(d) mm
DD175-50	150-200	150	230	109.5	200
DD210-50	200-250	150	260	109.5	230
DD210-70	200-250	170	260	129.5	230
DD210-100	200-250	200	260	159.5	230
DD291-100	200-300	200	350	159.5	320
DD360-100	300-400	200	430	159.5	400
DD450-100	400-500	200	520	159.5	490
DD532-70	500-600	170	600	129.5	570

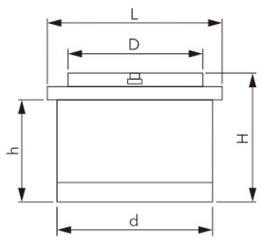

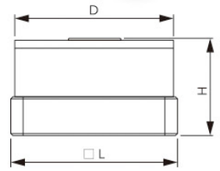

MOTOR TYPE	Diameter(D) mm	Total height(H) mm	Width(L) mm
DDH115-08	150-200	175	250
DDH115-48	200-300	175	370

MOTOR MAKER			GSA	GSA
MOTOR TYPE			DDH115-08	DDH115-48
Power Voltage, AC			220V	220V
Cooling condition			Free Air convection	Free Air convection
1	Tp,Peak torque	Nm	5.3	29.5
2	Tc, Continuous torque	Nm	2.1	12.6
3	Ip, Peak current	Arms	4.3	4
4	Ic, Continuous current	Arms	1.7	1.7
5	Np, Max. speed	r/min	2000	350
6	Ns, Continuous speed	r/min	1500	200
7	Pc, Continuous rated output power	W	155	127
8	Ploss, Max continuous power dissipation	W	220	357
9	Indexing Accuracy	sec.	±3	±3
10	Repeatability	sec.	±1	±1
11	MAX. Loading Capacity of workpiece	kg	1.5	9

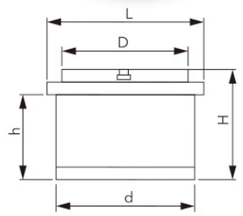

MOTOR TYPE	Diameter(D) mm	Total height(H) mm	Width(L) mm	Bottom height(h) mm	Bottom width(d) mm
DD175-50WS	150-200	175	250	134.5	220
DD291-50WS	200-300	175	370	134.5	340

MOTOR MAKER			GSA	GSA
MOTOR TYPE			DD175-50WS	DD291-50WS
Power Voltage, AC			AC380V	AC380V
Cooling condition			Water cooling	Water cooling
1	Tp, Peak torque	Nm	115	410
2	Tc, Continuous torque	Nm	76	270
3	Ip, Peak current	Arms	20	64
4	Ic, Continuous current	Arms	13.2	32
5	Np, Max speed	r/min	1500	600/1500
6	Ns, Continuous speed	r/min	400	300
7	Pc, Continuous rated output power	W	4000	8620
8	Ploss, Max continuous power dissipation	W	2200	4000
9	Indexing Accuracy	sec.	±7.5	±7.5
10	Repeatability	sec.	±1.5	±1.5
11	Pneumatic Pressure Supply	kg/cm²	5	5
12	Clamping Torque	Nm	46	180
13	MAX. Loading Capacity of workpiece	kg	26	80

Large Size Horizontal CNC Rotary Table

HRT-1400 SY

- Table Dia.
- Type of Large Size Horizontal CNC Rotary Table

◎ Build-in hydraulic ports system suitable for Special Machine of Horizontal machining. Center and Automobile / Motorbike Industrial.
◎ All units in Tables are manufactured from high quality materials and workmanship. Every Table has Running / Accuracy testing for at least 48 hours.
All electrical parts are imported from Japan/Germany for performance confidence.

◎ Suitable for Horizontal Machining Center, floor type boring machine. For both indeexing & simulltaneous machhine.
◎ Hi-Accuracy, Adapting a special anti-wearing alloy of bronze/nickel double-lead worm wheel and hardened steel worm scrrew ensure long term indexing accuracy.
◎ Could be manufactured according to customers' designing and interface of machine Saddle.
◎ Hydraulic Clamping, high rigid brake structure for heavy cutting.
◎ Table size from size 400mm to 2,500mm or manufactured according to customer's requirement, high loading/accuracy design also available suitable for heavy machining and metrology applications.
◎ Random dividing 0.001 degrees, Indexing Accuracy according to custome's requirement 6 sec, 10 sec. or higher indexing accuracy. (encoder is required)

ITEM / MODEL	HRT-500S1	HRT-630S1	HRT-800S1	HRT-1000S1
Table Size LxW (mm / inch)	500 / 19.67	630 / 24.79	800 / 31.48	1000 / 39.35
Width of T-slot (mm / inch)	18^{H7} / 0.71^{H7}	18^{H7} / 0.71^{H7}	18^{H7} / 0.71^{H7}	22^{H7} / 0.87^{H7}
Total Height (mm / inch)	305 / 12.0	315 / 12.39	340 / 13.38	380 / 14.95
Servo Motor Type	α12 i / α22 i	α22 i	α22 i	α22 i / α30 i
Gear Ratio	1:90	1:180	1:180	1:180
Max. R.P.M. (rpm) (motor : 2000 / rpm)	22.2	11.1	11.1	11.1
Clamping / Unclamping	Hydro. 35kg/cm²	Hydro. 35kg/cm²	Hydro. 35kg/cm²	Hydro. 35kg/cm²
Max. Loading Weight (kgs) (evenly distributed)	1000	2000	3000	5000
Indexing Accuracy Class (sec.)	15"	15"	15"	15"
Repeatability (sec.)	4"	4"	4"	4"
Clamping Force (kg)	240	210	280	1020
Clamping Torque (kgf•m)	240	210	280	1020

ITEM / MODEL	HRT-1200	HRT-1400SY	HRT-2000	HRT-2500
Table Size LxW (mm / inch)	1200 / 47.21	1400 / 55.08	2000 / 78.69	2500 / 98.36
Width of T-slot (mm / inch)	22^{H7} / 0.87^{H7}	22^{H7} / 0.87^{H7}	22^{H7} / 0.87^{H7}	28^{H7} / 1.10^{H7}
Total Height (mm / inch)	450 / 17.72	490 / 19.28	600 / 23.61	649 / 25.54
Servo Motor Type	α30 i	α30 i	α40 i	α40 i
Gear Ratio	1:360	1:720	1:720	1:1800
Max. R.P.M. (rpm) (motor : 2000 / rpm)	5.55	2.78	2.78	1.11
Clamping / Unclamping	Hydro. 35kg/cm²	Hydro. 35kg/cm²	Hydro. 35kg/cm²	Hydro. 35kg/cm²
Max. Loading Weight (kgs) (evenly distributed)	5000	10000	20000	30000
Indexing Accuracy Class (sec.)	30"	30"	30"	30"
Repeatability (sec.)	4"	4"	4"	4"
Clamping Force (kg)	1405	1800	2000	6800
Clamping Torque (kgf•m)	1405	1800	2000	6800

※ GSA remains the right of modification. All specifications can be modified according to customers' requirement.

◎ Servo motor model → Refer to P48
◎ To match AC-/DC-/Stepping-Controller → Refer to P46
◎ Optional accessories → Refer to P47

HRT-1400SY

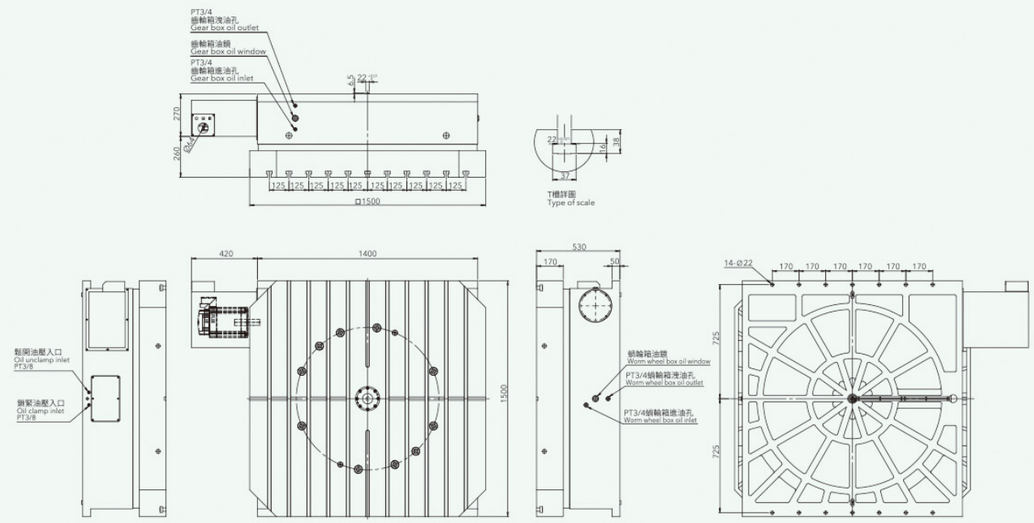

HRT-2000

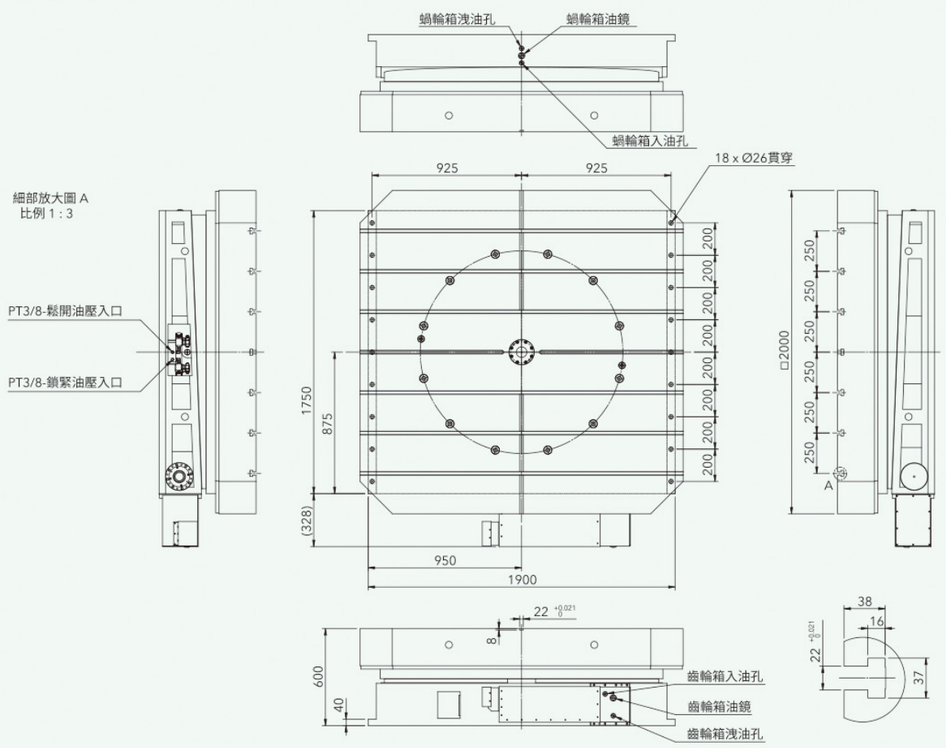

HIT / HRT

Precision Index Table

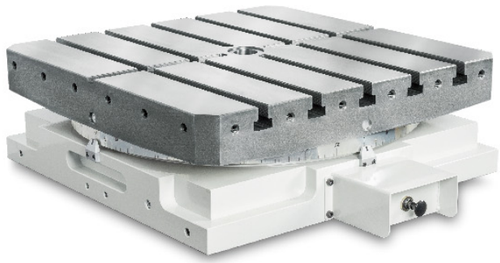

GCT-600

Size of Table

Type of Precision Index Table

2 PCS hirth coupling

- Suitable for the high accuracy machining such as Boring-Milling, Grinding-Machine.
- Build-in 2 pieces hirth coupling for positioning, indexing accuracy +/- 3 sec, ensure a long-term operation.
- Powerful clamping design, allow heavy cutting and boring.
- Clamping / Unclamping by pneumatic, easy operation.
- The body is FC-35 cast iron, durable and will last longer without deformation.

ITEM / MODEL	GCT-301	GCT-450	GCT-600	GCT-700	GCT-800	GCT-1000	GCT-1200
Table Size LxW (mm / inch)	300x300 / 11.80x11.80	450x450 / 17.72x17.72	600x600 / 23.61x23.61	700x700 / 27.54x27.54	800x800 / 31.48x31.48	1000x1000 / 39.35x39.35	1200x1200 / 47.21x47.21
Over All Height (mm / inch)	140 / 5.51	170 / 6.69	200 / 7.87	220 / 8.66	280 / 11.02	300 / 11.80	340 / 13.38
Spindle Hole (mm / inch)	ø25 / ø0.98	ø30 / ø1.18	ø40 / ø1.57	ø40 / ø1.57	ø60 / ø2.36	ø60 / ø2.36	ø80 / ø3.15
T-slot Size (mm / inch)	14^{H7} / 0.55^{H7}	8^{H7} / 0.71^{H7}	20^{H7} / 0.79^{H7}	20^{H7} / 0.79^{H7}	22^{H7} / 0.87^{H7}	22^{H7} / 0.87^{H7}	22^{H7} / 0.87^{H7}
Table Lifting Up & Clamp Down Stroke (mm / inch)	5 / 0.20	5 / 0.20	5 / 0.20	5 / 0.20	8 / 0.31	8 / 0.31	8 / 0.31
Clamping / Unclamping	Pneu. 5~8 kg/cm²						Pneu. 5~8 kg/cm² Hydro. 30 kg/cm²
Revolving	Manual						
Number of Division (degree)	15°	1 or 5°					
Max. Load Weight in Theory (kgs)	1200	2400	3400	3400	4500	6000	7000
Max. loading weight (kgs) (evenly distributed)	500	1000	2000	2000	3000	5000	6000
Clamping Capacity (kgs)	1000	2200	3200	3200	5400	5400	8100
N.W. (kgs)	90	200	400	600	900	1200	2000

※ GSA remains the right of modification. All specifications can be modified according to customers' requirement.

GCT-301~1200

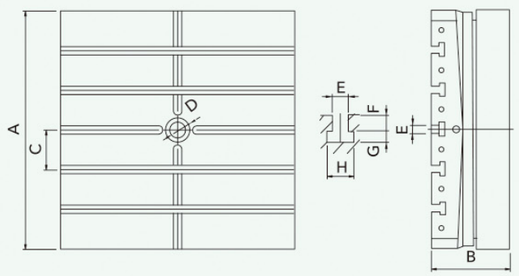

Unit: mm / inch

	GCT-301	GCT-450	GCT-600	GCT-700	GCT-800	GCT-1000	GCT-1200
A	300 / 11.81	450 / 17.72	600 / 23.61	700 / 27.54	800 / 31.48	1000 / 39.35	1200 / 47.21
B	140 / 5.51	170 / 6.69	200 / 7.87	220 / 8.66	280 / 11.02	300 / 11.81	340 / 13.38
C	100 / 3.94	100 / 3.94	100 / 3.94	125 / 4.92	100 / 3.94	150 / 5.90	200 / 7.87
D	-	30 / 1.18	40 / 1.57	40 / 1.57	60 / 2.36	60 / 2.36	80 / 3.15
E	12 / 0.47	18 / 0.71	20 / 0.79	20 / 0.79	22 / 0.87	22 / 0.87	22 / 0.87
F	14 / 0.55	16 / 0.63	20 / 0.79	20 / 0.79	23 / 0.91	23 / 0.91	23 / 0.91
G	9 / 0.35	12 / 0.47	14 / 0.55	14 / 0.55	15 / 0.59	15 / 0.59	15 / 0.59
H	23 / 0.91	28 / 1.10	35 / 1.38	35 / 1.38	38 / 1.50	38 / 1.50	38 / 1.50

Horizontal Machining Center Table With Pallets

GSA+
GSA TECHNOLOGY CO., LTD.

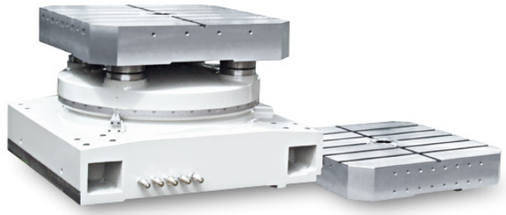

APCR-630 S1

Size of Table

Type of Horizontal Machining Center Table With Pallets

- Can be funished according to DIN, ISO or Customers' design, All pallets are exchangeable for every Index Tables or CNC Tables (Receivers) Pallets changing type can be Swing or Forward/Backward designed.
- By high accuracy 4 pcs Cones/Cups.
- By Hydraulic 4 pcs Pull Studs or Clamping Plate.
- Can be designed by customers' drawings Saddle.
- High accuracy and tested modular system for Table (Receiver) & sigle/Multi Pallets design. Especially suitable for new Horizontal Machining Centers as well as for existing Customers' Design Horizontal Table/Pallets manufacturing.
- TAll units Table(Reveiver) & sigle/Multi Pallets are manfactured from high quality materials and workmanship. Every Table has Running/Accuracy testing for at least 48 hours. All electrical parts are imported from Japan/Germany for performance confidence.
- 1 degree or 0.001 degree increment are optional Can be choosed by customers' request. +/- 2 sec. or +/- 3 sec.(APR series:encoder is required)

ITEM / MODEL	APCR/APCI-500S1	APCR/APCI-630S1	APCR/APCI-800S1	APCR/APCI-1000
Pallet Dimensions (mm / inch)	500 / 19.67	630 / 24.79	800 / 31.48	1000 / 39.35
T-slot Size (mm / inch)	18^{H7} / 0.71^{H7}	18^{H7} / 0.71^{H7}	18^{H7} / 0.71^{H7}	22^{H7} / 0.87^{H7}
Rounded Corners (mm / inch)	673 / 26.48	811 / 31.91	1025 / 40.33	1570 / 61.77
Total Height (mm / inch)	450 / 17.71	506 / 19.91	557 / 21.92	550 / 21.64
Clamping Station Weight (kgs)	365	600	750	1100
Pallet Weight (kgs)	75	120	170	300
Max. Loading (kgs)(evenly distributed)	600	1200	2000	3000
Clamping Force (kgs)	240/5495	210/12000	280/14000	8000
Machining Torque (kg/m)	240/900	210/1900	280/2900	450
Parallelism (mm)	0.015	0.015	0.025	0.03
Repeatability (mm)	0.01	0.01	0.01	0.01

※ GSA remains the right of modification. All specifications can be modified according to customers' requirement.

APCR-630S1

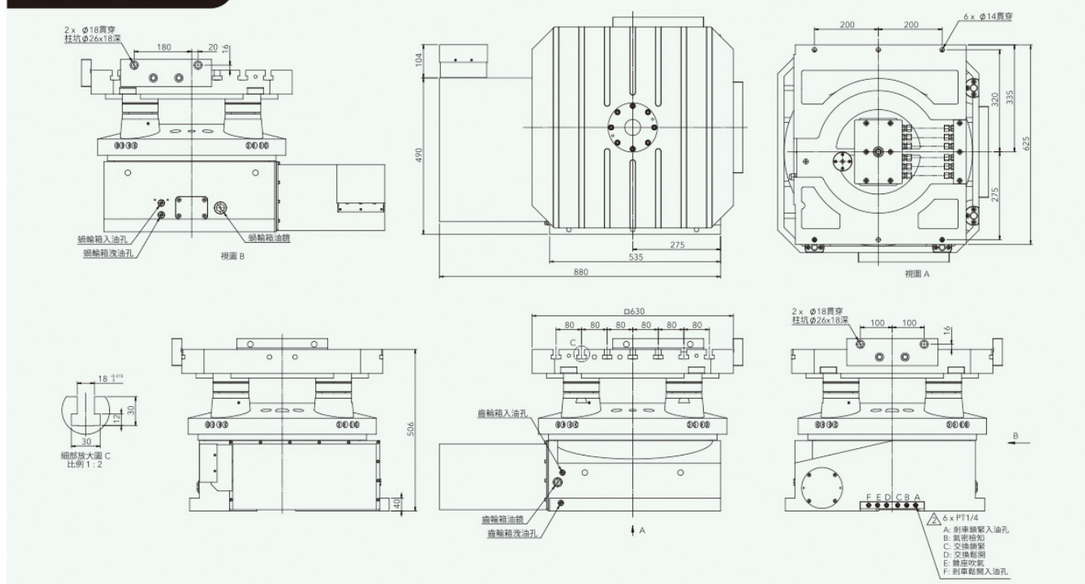

APCR / APCI

Manual Tailstock

TS-A/B/C

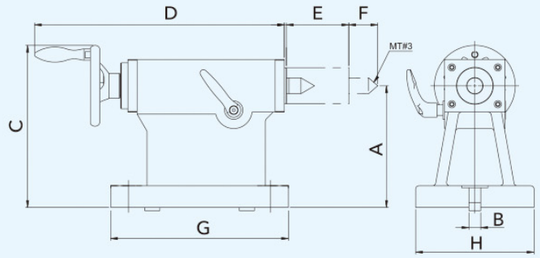

Unit: mm / inch

MODEL / ITEM	A	B	C	D	E	F	G	H	Center Taper	Suitable Rotary Table
TS-A115	115 4.53	14 0.55	165.5 6.52	315 12.40	65 2.56	35 1.38	180 7.09	115 4.53	MT#2	CNC-120R
TS-A135	135 5.31	18 0.71	185.5 7.30	315 12.40	65 2.56	35 1.38	180 7.09	115 4.53	MT#2	CNC-170R, CNC-170RB
TS-A160	160 6.30	18 0.71	210.5 8.29	315 12.40	65 2.56	35 1.38	180 7.09	115 4.53	MT#2	CNC-200R, CNC- 200RB
TS-B185	185 7.28	18 0.71	246.5 9.70	380 14.96	95 3.74	44 1.73	270 10.63	180 7.09	MT#3	CNC-250R, NCF-250, CNC-250RB
TS-B210	210 8.27	18 0.71	271.5 10.69	380 14.96	95 3.74	44 1.73	270 10.63	160 6.30	MT#3	CNC-320R, NCF-320, CNCMT-250
TS-B250	250 9.84	18 0.71	311.5 12.26	380 14.96	95 3.74	44 1.73	270 10.63	160 6.30	MT#3	CNC-400R, NCF-400
TS-B270	270 10.63	18 0.71	329 12.95	380 14.96	95 3.74	44 1.73	270 10.63	180 7.09	MT#3	CNCMT-320
TS-C310	310 12.20	18 0.71	415 16.34	436 17.17	95 3.74	51.5 2.03	295 11.61	220 8.66	MT#4	CNC-500R
TS-C400	400 15.75	18 0.71	476 18.74	436 17.17	95 3.74	51.5 2.03	315 12.40	240 9.45	MT#4	CNC-630R
TS-C480	480 18.90	22 0.87	585 23.03	436 17.17	95 3.74	51.5 2.03	338 13.31	280 11.02	MT#4	CNC-800R

Pneumatic Tailstock / Hydraulic Tailstock

GSA+
GSA TECHNOLOGY CO., LTD.

TS-A/B/C(P/H)

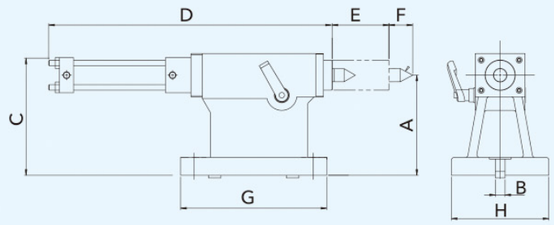

Unit: mm / inch

MODEL / ITEM	A	B	C	D	E	F	G	H	Center Taper	Suitable Rotary Table
TS-A115 (P/H)	115 4.53	14 0.55	171.5 / 147.5 6.75 / 5.81	398 / 408 15.67 / 16.06	85 3.35	35 1.38	180 7.09	115 4.53	MT#2	CNC-120R
TS-A135 (P/H)	135 5.31	18 0.71	191.5 / 167.5 7.54 / 6.59	398 / 408 15.67 / 16.06	85 3.35	35 1.38	180 7.09	115 4.53	MT#2	CNC-170R, CNC-170RB
TS-A160 (P/H)	160 6.30	18 0.71	216.5 / 192.5 8.52 / 7.58	398 / 408 15.67 / 16.06	85 3.35	35 1.38	180 7.09	115 4.53	MT#2	CNC-200R, CNC- 200RB
TS-B185 (P/H)	185 7.28	18 0.71	242 / 217.5 9.53 / 8.56	475 / 508 18.70 / 20.0	105 4.13	44 1.73	270 10.63	180 7.09	MT#3	CNC-250R, NCF-250, CNC-250RB
TS-B210 (P/H)	210 8.27	18 0.71	266.5 / 242.5 10.49 / 9.55	475 / 508 18.70 / 20.0	105 4.13	44 1.73	270 10.63	160 7.09	MT#3	CNC-320R, NCF-320, CNCMT-250
TS-B250 (P/H)	250 9.84	18 0.71	306.5 / 282.5 12.07 / 11.12	475 / 508 18.70 / 20.0	105 4.13	44 1.73	270 10.63	160 7.09	MT#3	CNC-400R, NCF-400
TS-B270 (P/H)	270 10.63	18 0.71	326.5 / 302.5 12.85 / 11.91	475 / 508 18.70 / 20.0	105 4.13	44 1.73	270 10.63	160 7.09	MT#3	CNCMT-320
TS-C310 (P/H)	310 12.20	18 0.71	366.5 / 342.5 14.43 / 13.48	531 / 577 20.91 / 22.72	135 5.31	51.5 2.03	295 11.61	220 8.66	MT#4	CNC-500R
TS-C400 (P/H)	400 15.75	18 0.71	456.5 / 432.5 17.97 / 17.03	531 / 577 20.91 / 22.72	135 5.31	51.5 2.03	315 12.40	240 9.45	MT#4	CNC-630R
TS-C480 (P/H)	480 18.90	22 0.87	536.5 / 512.5 21.12 / 20.18	531 / 577 20.91 / 22.72	135 5.31	51.5 2.03	338 13.31	280 11.02	MT#4	CNC-800R

Strong Tailstock

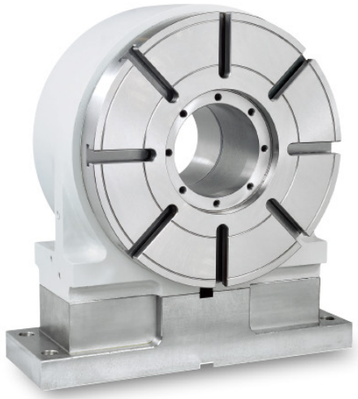

TSA-120S~800S

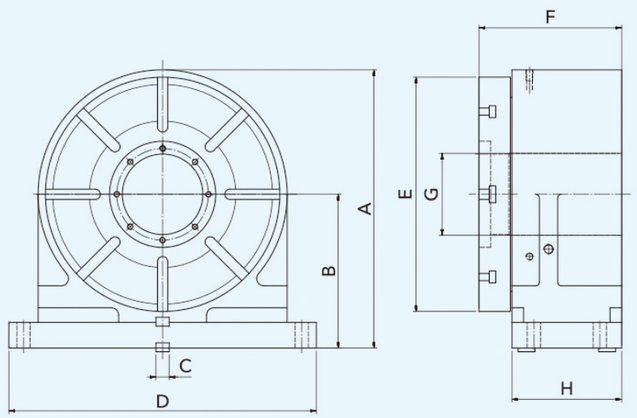

Unit: mm / inch

MODEL / ITEM	A	B	C	D	E	F	G	H	Suitable Rotary Table
TSA-120S	193 7.60	115 4.53	14 0.55	156 6.14	Ø120 Ø4.72	130 5.12	30 1.18	100 3.94	CNC-120R
TSA-200S	265 10.43	160 6.30	18 0.71	280 11.02	Ø200 Ø7.87	146 5.756	35 1.38	115 4.53	CNC-170R, CNC-200R
TSA-251S	325 12.80	185 7.28	18 0.71	350 13.78	Ø250 Ø9.84	171 6.73	35 1.38	195 7.68	CNC-250R, CNC-320R, CNC-400R
TSA-320S	380 14.96	210 8.27	18 0.71	420 16.54	Ø320 Ø12.60	195 7.68	110 4.33	150 5.91	CNC-320R, CNC-400R, CNC-500R

M-MATE II AC Servo Controller

GSA+
GSA TECHNOLOGY CO., LTD.

- Use LED backlight 5.7-inch monitor
- Chinese / English subtitles, easy operation.
- Conneacting with M-Code of CNC M/C (Any Brand)
- Adopting AC servo systems to perform in high-precision, high speed, large torque
- To match any brand of servo motors such as : Yaskawa, Mitsubishi, Delta, TECO
- To offer 36 sets compensation for backlash adjusting, every 10 degrees compensation once to achieve the best accuracy
- Optional HEIDENHAIN encoder to be closed-loop system
- Optional MPG hand wheel for workpiece adjusting

ITEM	SPECIFICATION
Min. Increment	0.001°
Programmable Angle	0.000~999.999°
Emergency Stop	Whole system stop
Input Method	Keyboard input
Program Capacity	15 sets of program
Program Step Capacity	90 steps for each program
Homing	Machine homing / relative homing
Jump Function	Jump to the subroutine (JUMP)
Cycle Loop	Step up to 999 times per cycle
Backlash Adjustment	Adjusted by parameter screen 1 of 2
Standard Parameter Function	Input / Output interface, long press "."
Programmable System	Accepted incremental / absolute value
Instruction Selecting	Program input instruction / Indexing and rotating instruction
Origin Adjustment	Origin offset compensation setting
External Start Signal	Automatic operation by M-CODE
Delay Time	0.1 to 99.9 seconds of delay
Input Power	Three-phase AC-220V 50/60HZ
Connection Cable	Power cable / Motor cable / CNC connection cables

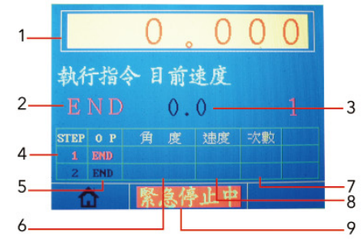

1. The angle of rotary table
2. Executing instruction
3. The speed of rotary table Example
4. Display executing step
5. Program instrucations
6. Executing angle
7. The number of execution times
8. Executing speed
9. Current status

Program example (a circle drilling four holes,method of equal amount (90° degrees)) (program screen as shown below)

Step 1	Turn on the power	Step 5	Input numeric key for setting speed
Step 2	Press SCR key to enter the program edit screen	Step 6	Input 4 of numeric keys to enter (division into four units)
Step 3	Press 2 of numeric key to enter	Step 7	Press the MODE key to return main screen
Step 4	Input 360 (degrees) of numeric key to enter	Step 8	Press START key for operation

	Power switch	MODE	Back to the execution screen
	Emergency stop button	PAGE , PAGE	Page key: switching program page
	MPG(hand wheel) socket	JOG , JOG	Jog key: select the direction for table rotating
	Screen for info displayed	, , ,	Cursor key: direction selecting
STOP	Stop key	SCR	Switching key for system screen
0 ~ 9	Numeric keys: enter the program and parameters	OP	Selection key for program OP
•	I. To be decimal point while program setting or parameter status II. Program code setting: press key 2 seconds while the program STEP1 of OP	ZERO	Return to relative origin
+/-	"+" and "-" key: be the function while program setting or parameter status"	HOME	Return to mechanical origin
INS	Insert a program while program setting	ENTER	Enter key
CLR	I. Long press 3 seconds for setting 0 degree of table while the execution status II. Delete a program while program setting	START	Start key

Controller

Accessories

Chuck with Rotary Table Application

Chart 1

Suitable Rotary Table		CNC-120R	CNC-170R	CNC-200R	CNC-250R	CNC-320R	CNC-400R	CNC-500R	CNC-630R	CNC-800R
Manual Scroll chuck	Model NO.	SC-4	SC-6	SC-7	SC-8	SC-10	SC-12	SC-12	SC-12 SC-16	SC-12 SC-16
	Size	4"	6"	7"	8"	10"	12"	12"	12" 16"	12" 16"
Hydraulic chuck (Non Through hole)	Model NO.	V-206	V-206	V-206	V-208	V-210	V-212	V-212	V-215 V-218	V-215 V-218
	Size	6"	6"	6"	8"	10"	12"	12"	15" 18"	15" 18"

※ SC series is 3-jaw scroll chuck and internal and external jaws can be used interchangably.
※ SIC series is 4-jaw scroll. Gripping of square or octagonal workpieces could fit into central line automatically. SIC series has high stability in gripping thin tube workpieces.
※ SK series is 3-jaw strong scroll chuck. The hard jaws are suitable for heavy cutting and soft jaws suitable for light and precision cutting.
The hard jaws cowd be used as internal and external jaws.
※ SIK series is 4-jaw strong scroll chuck. The hard jaws are adopted for square or octagonal thin tube workpieces machining.
The soft jaws could grip rectangular workpiece after being unisotropic machined.

(1) Hydraulic Unit

(2) PHC Booster

(3) Jig Fixture

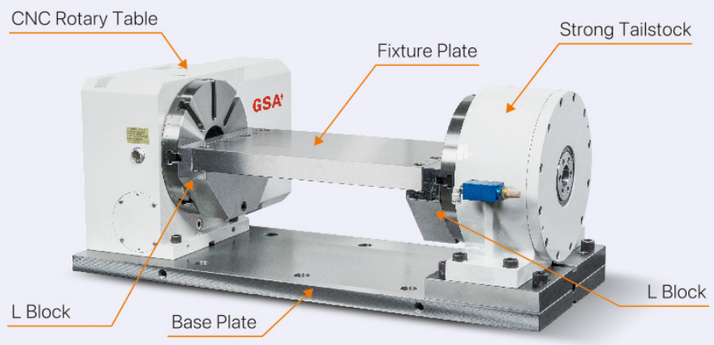

GSA+
GSA TECHNOLOGY CO., LTD.

Motor Model Specifications Chart

Chart 2

TYPE	MOTOR BRAND			
MODEL	FANUC	MELDAS	SIEMENS	HEIDENHAIN
CNC-120R	α2i	HG-75	1FK7042	QSY96G
CNC-170R	α4i	HG-104	1FK7060	QSY116C
CNC-200R	α4i	HG-104	1FK7060	QSY116C
CNC-250R	α4i / α8i	HG-104 / HG-154	1FK7060/1FK7063	QSY116C/QSY116E
CNC-320R	α12i	HG-204	1FK7083	QSY155B/QSY155C
CNC-400R	α12i	HG-204	1FK7083	QSY155C
CNC-500R	α12i	HG-204 / HG-354	1FK7083/1FK7101	QSY155F
CNC-630R	α22i	HG-354	1FK7101	QSY190C
CNC-800R	α22i	HG-354	1FK7101	QSY190C
CNC-1000HV	α30i	HG-453	1FK7103	QSY190D
CNC-1200HV	α30i	HG-453	1FK7103	QSY190D
CNCB-800R	α22i	HG-354	1FK7101	QSY190C
CNC-120R-3W	α8i	HG-154	1FK7063	QSY116E
CNC-170R-3W	α12i	HG-204	1FK7083	QSY155C
CNC-200R-3W	α12i	HG-204	1FK7083	QSY155C
NCF-250R	α8i	HG-154	1FK7063	QSY116E
NCF-320R	α12i	HG-204	1FK7083	QSY155C
NCF-400R	α12i	HG-204	1FK7083	QSY155C
NCF-500R	α22i	HG-354	1FK7101	QSY190C
RCT-170R	α4i	HG-104	1FK7060	QSY116C
RCT-200R	α4i	HG-104	1FK7060	QSY116C
RCT-250R	α8i	HG-154	1FK7063	QSY116E
RCT-320R	α8i	HG-154	1FK7063	QSY116E
HIT-500S1	α12i / α22i	HG-204S / HG-354S	1FK7083 / 1FK7101	QSY155C / QSY155F
HIT-630S1	α22i	HG-354S	1FK7101	QSY190C
HIT-800S1	α22i	HG-354S	1FK7103	QSY190C
HIT-1000S1	α22i	HG-354	1FK7103	QSY190C
HRT-500S1	α12i / α22i	HG-204S / HG-354S	1FK7083 / 1FK7101	QSY155C / QSY155F
HRT-630S1	α22i	HG-354S	1FK7101	QSY190C
HRT-800S1	α22i	HG-354S	1FK7103	QSY190C
HRT-1000S1	α22i	HG-354	1FK7103	QSY190C

TYPE	MOTOR BRAND							
MODEL	FANUC		MELDAS		SIEMENS		HEIDENHAIN	
	Rotating	Tilting	Rotating	Tilting	Rotating	Tilting	Rotating	Tilting
CNCT-100	α2i	α2i	HG-75	HG-75	1FK7042	1FK7042	QSY96G	QSY96G
CNCT-200	α4 i	α8i	HG-104	HG-154	1FK7060	1FK7063	QSY116C	QSY116E
CNCT-250A	α4 i	α8i	HG-104	HG-154	1FK7060	1FK7063	QSY116C	QSY116E
CNCT-320	α8i	α12i	HG-154	HG-254	1FK7063	1FK7083	QSY116E	QSY155B
CNCT-250RS	α8i	α8i	HG-154	HG-154	1FK7063	1FK7063	QSY116E	QSY116E
CNCT-320RS	α8i	α22i	HG-154	HG-354	1FK7063	1FK7101	QSY116E	QSY155F
CMCT-630	α22i	α22i	HG-354	HG-354	1FK7101	1FK7101	QSY190C	QSY190C
CNCT-800	α22i	α30i	HG-354	HG-453	1FK7101	1FK7103	QSY190C	QSY190D
CNCTT-400	α12i	α22i	HG-254	HG-354	1FK7083	1FK7101	QSY155B	QSY190C
CNCTT-500	α12i	α40i	HG-254	HG-703	1FK7083	1FK7105	QSY155B	QSY190D
CNCMT-200	α4 i	-	HG-104	-	1FK7060	-	QSY116C	-
CNCMT-250	α4 i	-	HG-104	-	1FK7060	-	QSY116C	-
CNCMT-320	α12i	-	HG-204	-	1FK7083	-	QSY155C	-
CNCMT-400	α12i	-	HG-204	-	1FK7083	-	QSY155C	-
RCTT-350RS	α8i	α22i	HG-154	HG-354	1FK7063	1FK7101	QSY116E	QSY155F

Accessories Connection Diagram

CNC match Hydraulic Chuck

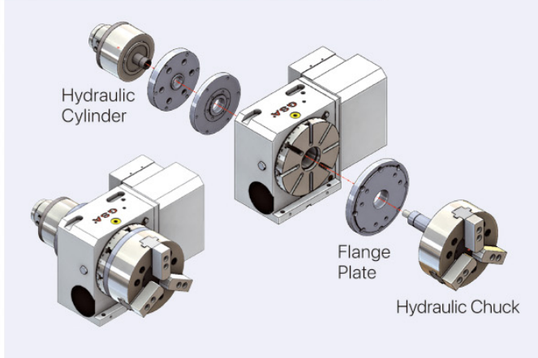

CNC match Manual Chuck

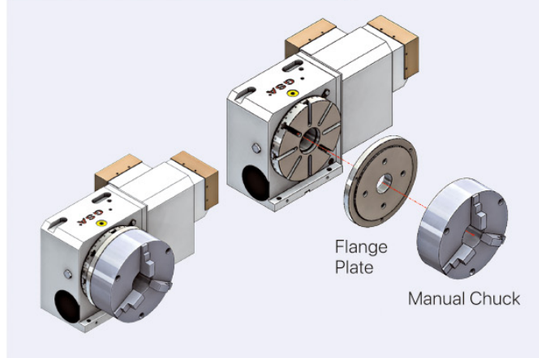

CNC match Encoder

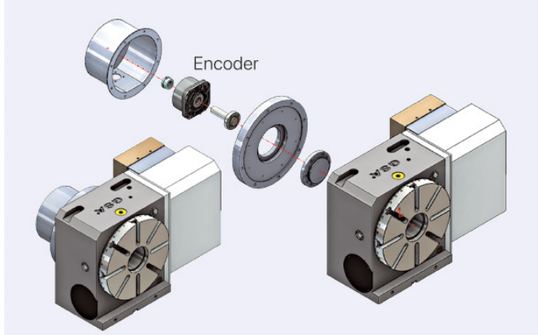

CNC match Hydraulic Distributor

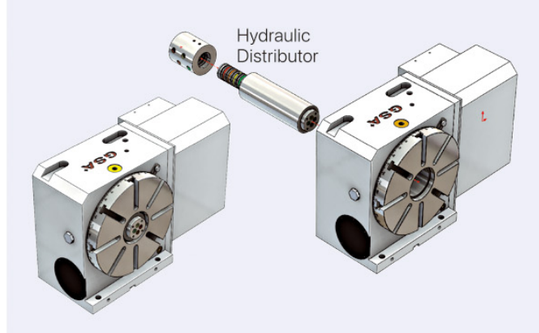

CNC match Tailstock Type

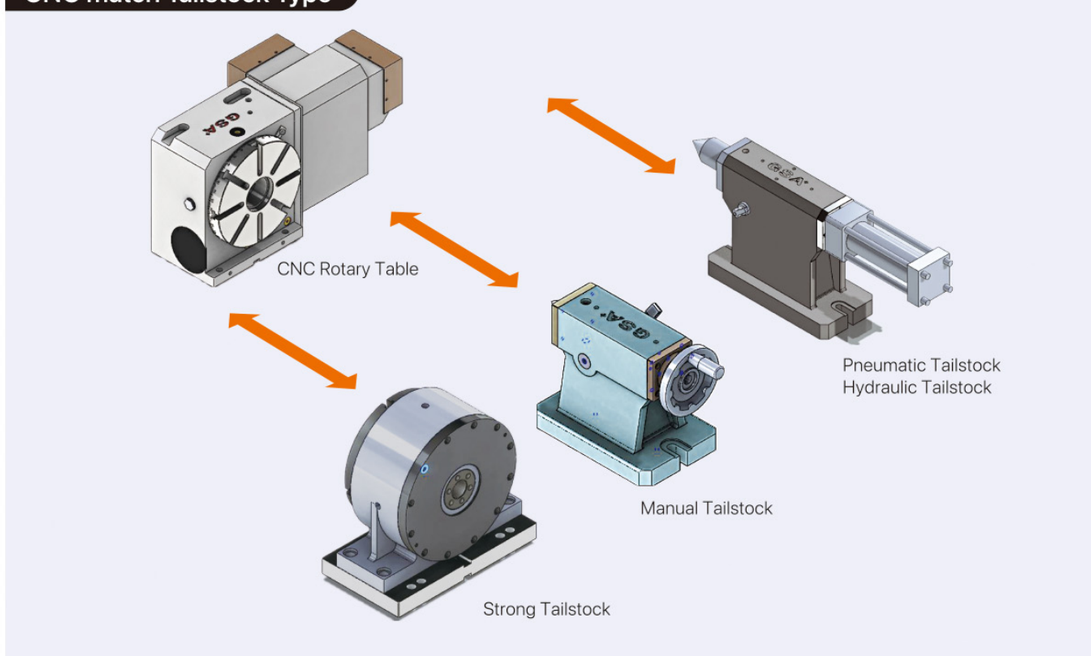

Accuracy Standards

GSA+
GSA TECHNOLOGY CO., LTD.

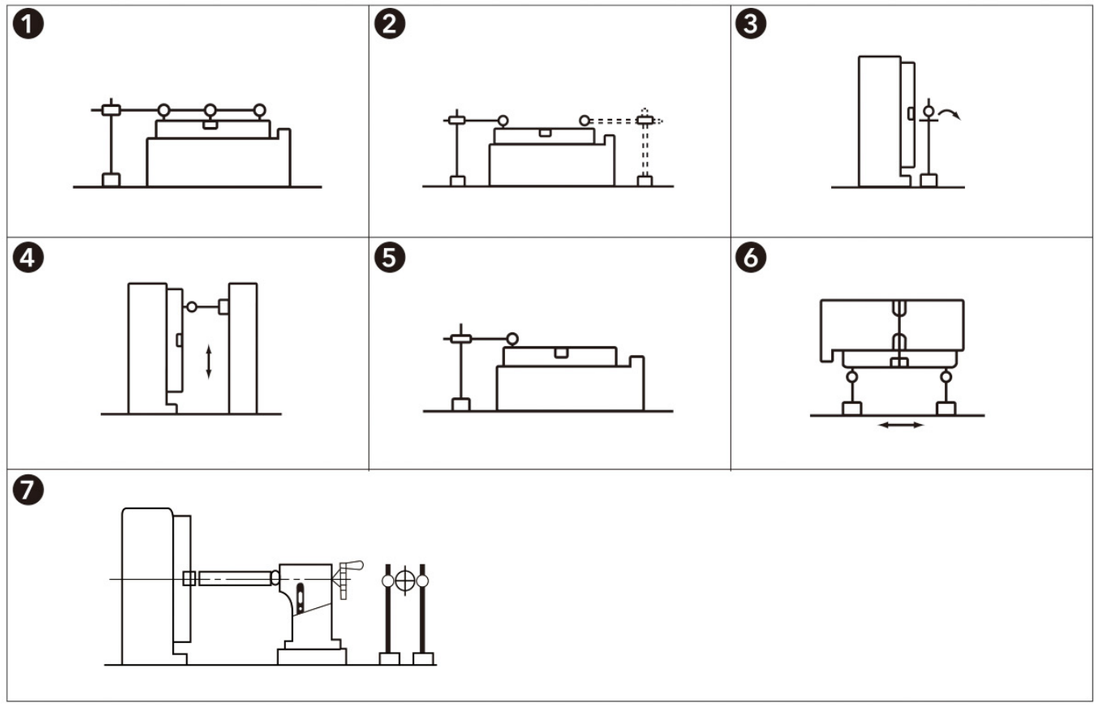

Unit: mm

MODEL \ INSPECTION ITEMS	1 Table top flatness	2 Parallelism of table top and frame bottom	3 Runout of table spindle center	4 Perpendicularity of table top to frame bottom	5 Table top runout	6 Perpendicularity of table top to frame bottom guide block	7 Parallelism of center line between headstock & tailstock to frame bottom guide block
CNC-120R	0.01	0.01	0.015	0.012	0.01	0.02	0.02
CNC-170R	0.01	0.01	0.01	0.02	0.015	0.02	0.02
CNC-200R	0.01	0.01	0.01	0.02	0.015	0.02	0.02
CNC-250R	0.01	0.01	0.01	0.02	0.015	0.02	0.02
CNC-320R	0.01	0.01	0.01	0.02	0.015	0.02	0.02
CNC-400R	0.015	0.015	0.01	0.02	0.015	0.02	0.02
CNC-500R	0.015	0.015	0.01	0.02	0.015	0.02	0.02
CNC-630R	0.025	0.025	0.01	0.025	0.02	0.02	0.02
CNC-800R	0.025	0.025	0.01	0.025	0.02	0.02	0.02
CNC-120RB	0.01	0.01	0.01	0.02	0.015	0.02	0.02
CNC-170RB	0.01	0.01	0.01	0.02	0.015	0.02	0.02
CNC-200RB	0.01	0.01	0.01	0.02	0.015	0.02	0.02
CNC-250RB	0.01	0.02	0.01	0.02	0.015	0.02	0.02
NCF-250R	0.01	0.01	0.01	0.015	0.01	0.02	0.02
NCF-320R	0.01	0.01	0.01	0.015	0.01	0.02	0.02
NCF-400R	0.015	0.015	0.01	0.02	0.015	0.02	0.02
NCF-500R	0.015	0.015	0.01	0.02	0.015	0.02	0.02

Accuracy Standards

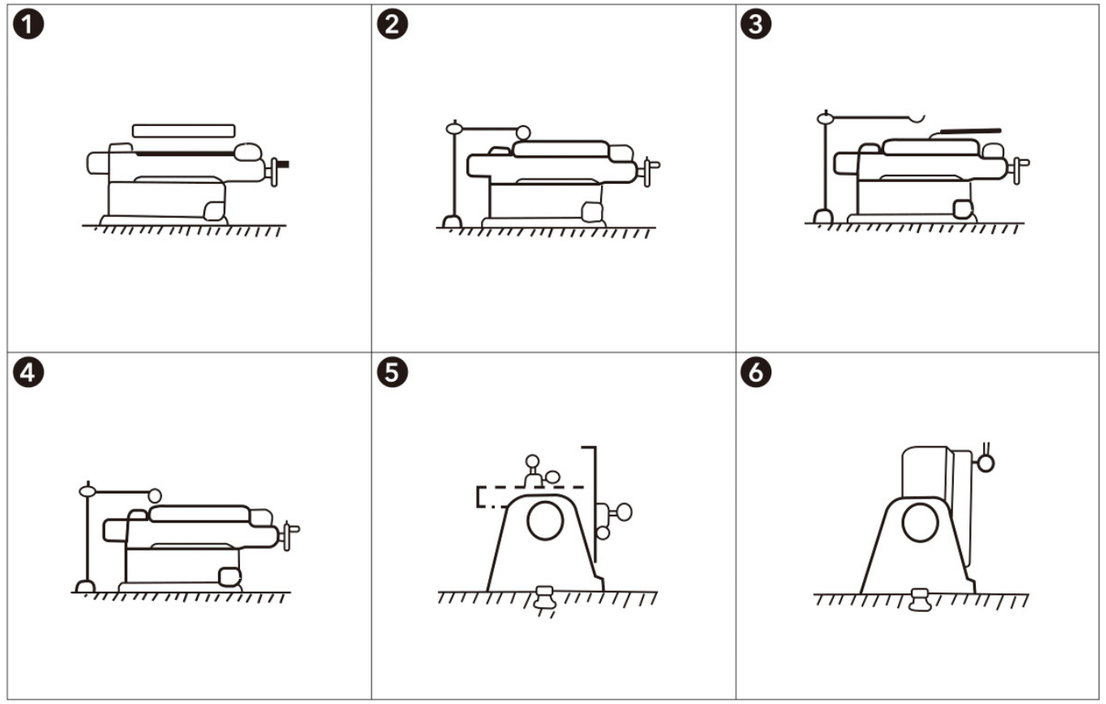

Unit: mm

INSPECTION ITEMS / MODEL	1 Table top flatness	2 Parallelism of table top and frame bottom	3 Runout of table spindle center	4 Table top runout	5 Parallelism of tilting axis center line and frame bottom	6 Parallelism of table top to frame bottom guide block
CNCT-100	0.01	0.02	0.01	0.015	0.02	0.02
CNCT-200	0.01	0.02	0.01	0.015	0.02	0.02
CNCT-250	0.01	0.02	0.01	0.015	0.02	0.02
CNCT-320RS	0.01	0.02	0.01	0.015	0.02	0.02
CNCT-630	0.01	0.02	0.01	0.015	0.02	0.02
CNCT-800	0.01	0.02	0.01	0.015	0.02	0.02
CNCMT-200	0.01	0.02	0.01	0.015	0.02	0.02
CNCMT-250	0.01	0.02	0.01	0.015	0.02	0.02
CNCMT-320	0.01	0.02	0.01	0.015	0.02	0.02
CNCMT-400	0.02	0.02	0.01	0.015	0.02	0.02
CNCMT-500	0.02	0.02	0.01	0.015	0.02	0.02
CNCMT-630	0.02	0.02	0.01	0.015	0.02	0.02

Application of Products

GSA+
GSA TECHNOLOGY CO., LTD.

CNC-200R
Application : Vertical machining center

CNC-200R
Application : Vertical / Horizontal machining center

CNC-250R
Application : Vertical / Horizontal machining center

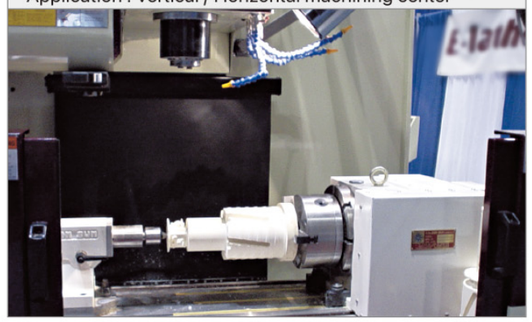

CNC-320R + TSA-320S (Strong Tailstock)
Application : Vertical machining center

SLR-175
Application : Vertical machining center

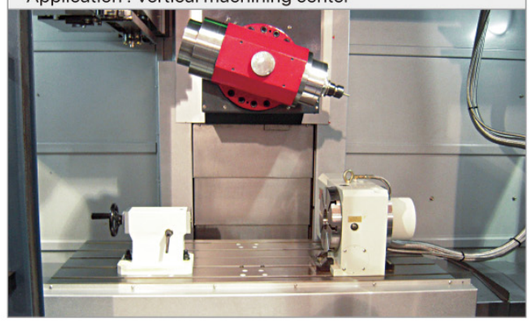

NCF-400 + TSA-251S (Strong Tailstock)
Application : Vertical / Horizontal machining center

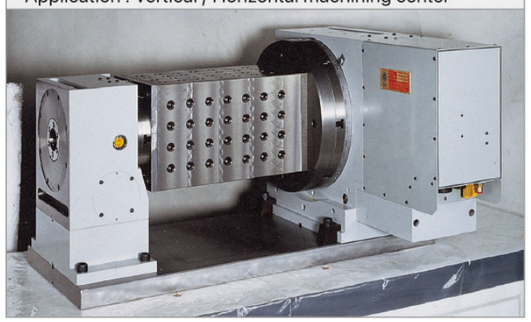

CNCT-100
Application : Vertical machining center

CNCT-450
Application : Vertical machining center

APPLICATION

MEMO

GSA+

Turret

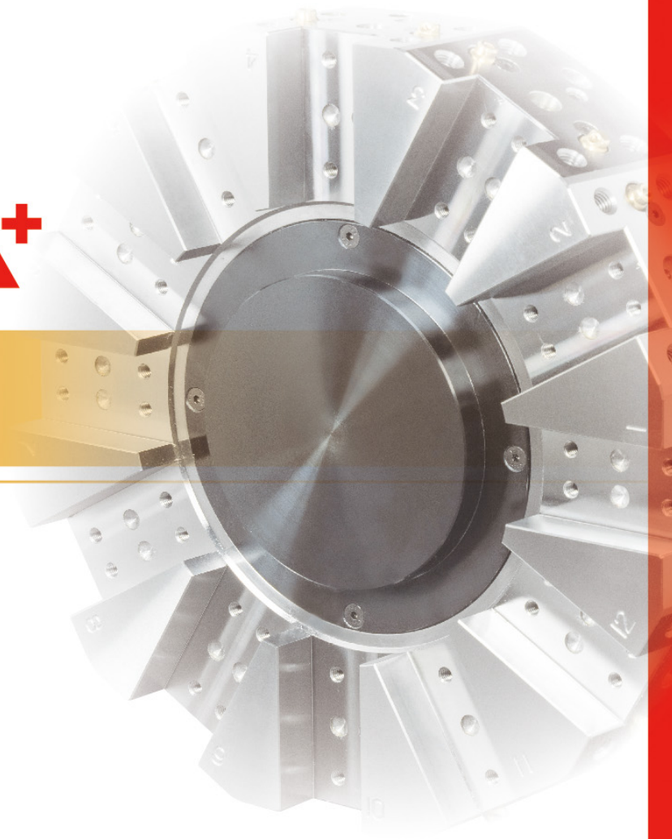

Hydraulic Turret

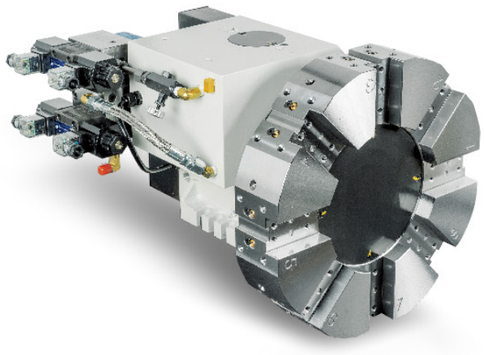

CLT-63-8T

- Type of Lathe Turret
- Center Height
- Allowed Number of Tools

◎ Equipped "double-cam-plate" for indexing mechanism, smooth with turbo-speed to turning the tool-disc, with compact design & high durability , suitable for heavy cutting of precision.
◎ Driving source per hydraulic to turning tool-disc, indexing and clamping/unclamping, precisely and correctly.
◎ Smart selection of nearby tools,controlled via proximity-detector and
◎ PLC programming,no error of tool-disc change.

ITEM / MODEL		CLT-63		CLT-80		CLT-100		CLT-125B		CLT-160A		CLT-200		CLT-300	
Allowed Number of Tools	N	8	12	8	12	8	12	8	12	8	12	8	12	8	12
Center Height	mm / inch	63 / 2.48		80 / 3.15		100 / 3.93		125 / 4.92		160 / 6.30		200 / 7.87		300 / 11.80	
Inertia of Movement for Tool-disc	kg.m²	1.6		5.5		11		12.8		20		40		40	
Rotation and Clamping (theoretical value)	Sec.	0.6		0.6		0.8		0.8		1.2		1.5		1.5	
Clamping Force	kgf	1060		2500		3400		6480		8100		11130		11130	
Total Indexing Time for 180° (include clamping) (theoretical value)	Sec.	1.4	1.6	1.4	1.6	1.5	1.85	1.5	1.85	3.6	5.2	4.5	6.5	4.5	6.5
Hydraulic Working Pressure	kgf /cm²	25~30		33~37		33~37		35~40		33~37		33~37		33~37	
Flow Rate	L / min	20		30		40		40		40		50		50	
Accuracy of Repeatability (theoretical value)	Sec.	±1"		±1"		±1"		±1"		±1"		±1"		±1"	
F1 x b 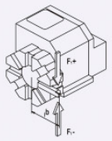	Nm	2100		3200		6000		9000		17500		24000		24000	
F2 x b 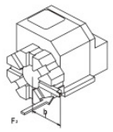	Nm	2500		3800		10000		12000		29000		40000		40000	
F3 x b 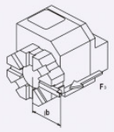	Nm	1200		1600		4000		6000		14500		20000		20000	
Net Weight (without tool disc)	kgs	46		62		97		115		200		380		400	
Diameter of Coupling & Type	mm / inch	Ø120 / Ø4.72 2 pcs		Ø160 / Ø6.30 2 pcs		Ø180 / Ø7.08 2 pcs		Ø210 / Ø8.26 2 pcs		Ø280 / Ø11.02 2 pcs		Ø346 / 13.61 2 pcs		Ø346 / Ø13.61 2 pcs	

※ GSA remains the right of modification. All specifications can be modified according to customers' requirement.

GSA+
GSA TECHNOLOGY CO., LTD.

ITEM / MODEL	CLT-63	CLT-80	CLT-100 CLT-125B	CLT-160A	CLT-200 CLT-300
8N	Disc size 228mm	Disc size 270mm	Disc size 330mm	Disc size 385mm	Disc size 483mm
12N	Disc size 290mm	Disc size 340mm	Disc size 420mm	Disc size 480mm	Disc size 600mm
Inside tool	Size Ø20	Size Ø32	Size Ø40	Size Ø40 / Ø50	Size Ø50
Facing holder	Size □20	Size □20 / □25	Size □25	Size □25 / □32	Size □32

Accessories connection diagram

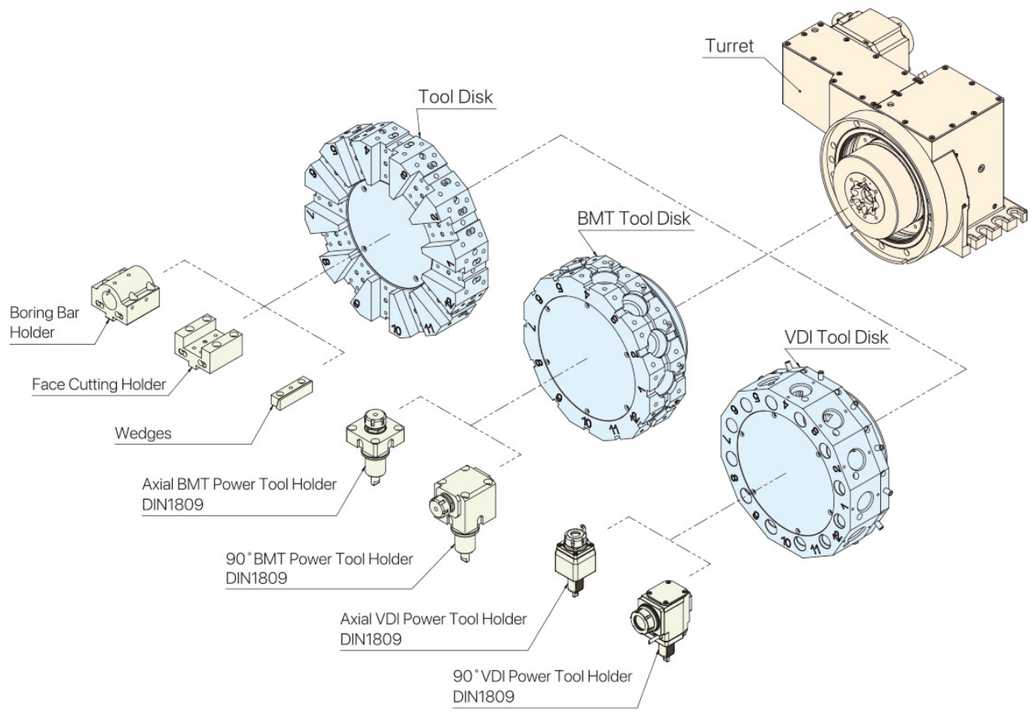

Hydraulic Turret

Electrical System CLT-63, 80, 100, 125, 200, 300

ITEM	ARTICLE	SPECIFICATION	CABLE CODE	SIGNAL
Sensor A	Position Sensor	10~30V DC 100 mA (Load) Output-PNP-NO	-24V -A -0	Brown 24V Black Out Blue 0V
Sensor B	Position Sensor	10~30V DC 100 mA (Load) Output-PNP-NO	-24V -B -0	Brown 24V Black Out Blue 0V
Sensor C	Position Sensor	10~30V DC 100 mA (Load) Output-PNP-NO	-24V -C -0	Brown 24V Black Out Blue 0V
Sensor D	Position Sensor	10~30V DC 100 mA (Load) Output-PNP-NO	-24V -D -0	Brown 24V Black Out Blue 0V
Sensor E	Disk Sensor	10~30V DC 100 mA (Load) Output-PNP-NO	-24V -E -0	Brown 24V Black Out Blue 0V
Sensor F	Disk Unclamp Sensor	10~30V DC 100 mA (Load) Output-PNP-NO	-24V -F -0	Brown 24V Black Out Blue 0V
Sol A	Disk Clamp(Unclamp) Solenoid	DC24V AC110V	A B P T	
Sol B	Disk Rotation Solenoid	DC24V AC110V	A B P T	

Electrical Sequence Diagram CLT-63, 80, 100, 125, 200, 300

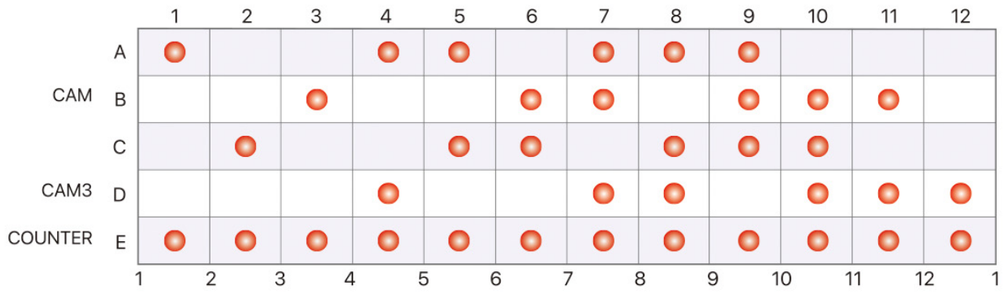

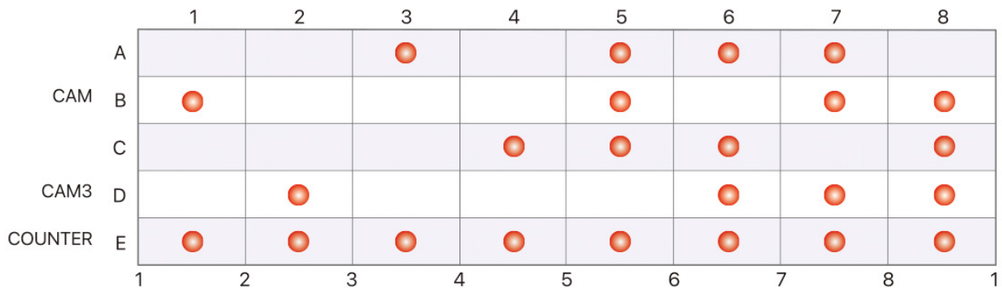

Servo Turret

GSA+
GSA TECHNOLOGY CO., LTD.

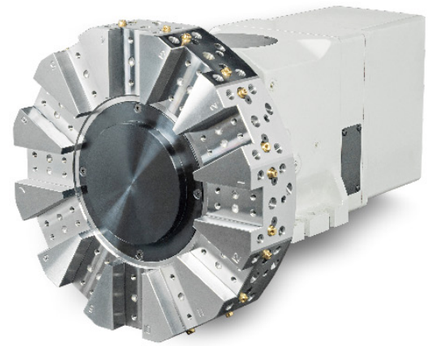

CLT-63SA-8T

- Type of Lathe Turret
- Center Height
- Servo Motor Drive
- Version
- Allowed Number of Tools

◎ All Series Use 3 Pieces Hirth Coupling & Hydraulic Clamp /unclamp System Suitable For Heavy Cutting Long Term Operation.
◎ Driving Source Per Mitsubishi Servo Motor/ Drive To Turing Tool Disc. Index Time Per Station Only Need 0.1 Sec. Indexing Accuracy :±2 Sec.
◎ Accepted OEM/ODM Orders.

ITEM / MODEL		CLT-50S	CLT-63SA		CLT-80SA		CLT-100S1	
Allowed Number of Tools	N	8	8	12	8	12	8	12
Center Height	mm / inch	50 / 1.97	63 / 2.48		80 / 3.15		100 / 3.93	
Inertia of Movement for Tool-disc	kg.m²	0.7	3.9	3.3	3.9	3.34	13.8	11.6
Rotation and Clamping (theoretical value)	Sec.	0.3	0.44	0.39	0.48	0.43	0.68	0.62
Clamping Force	kgf	500	1200		2000		3600	
Total Indexing Time for 180° (include clamping) (theoretical value)	Sec.	0.52	0.84		0.88		1.2	
Hydraulic Working Pressure	kgf /cm²	28~32	28~32		33~37		33~37	
Flow Rate	L / min	20	20		20		20	
Indexing Accuracy (theoretical value)	Sec.	±2"	±2"		±2"		±2"	
Accuracy of Repeatability (theoretical value)	Sec.	±1"	±1"		±1"		±1"	
Net Weight (without tool disc)	kgs	30	40		60		116	
Diameter of Coupling & Type	mm / inch	Ø80 / Ø3.15 3 pcs	Ø110 / Ø4.33 3 pcs		Ø130 / Ø5.11 3 pcs		Ø170 / Ø6.69 3 pcs	
Servo Motor Type		HG-KR43JK	HG-SR52JK		HG-SR52JK		HG-SR102JK	
F1 x b 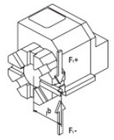	Nm	500	1000		2500		5200	
F2 x b 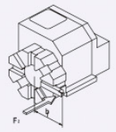	Nm	600	1200		3000		6000	
F3 x b 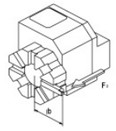	Nm	300	600		1600		3000	
Gear Ratio		1:30	1:36		1:36		1:45 / 1:80	

※ GSA remains the right of modification. All specifications can be modified according to customers' requirement.

CLT

GSA+
GSA TECHNOLOGY CO., LTD.

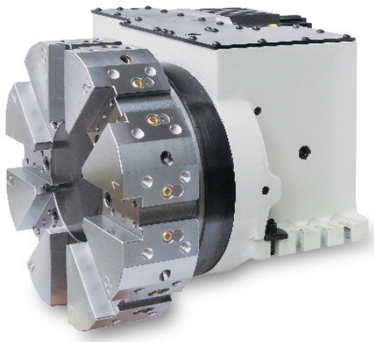

CLT-80SB-8T

- Type of Lathe Turret
- Center Height
- Servo Motor Drive
- Version
- Allowed Number of Tools

◎ All Series Use 3 Pieces Hirth Coupling & Hydraulic Clamp /unclamp System Suitable For Heavy Cutting Long Term Operation.
◎ Driving Source Per Mitsubishi Servo Motor/ Drive To Rotate Tool Disc.
◎ Index Time Per Station Only Need 0.1 Sec. Position Accuracy : 0.01mm.
◎ Accepted OEM / ODM Orders.

ITEM / MODEL		CLT-80SB		CLT-100SB		CLT-125SB		CLT-140SB		CLT-160SA		CLT-200SB	
Allowed Number of Tools	N	8	12	8	12	8	12	8	12	8	12	8	12
Center Height	mm / inch	80 / 3.15		100 / 3.93		125 / 4.92		140 / 5.51		160 / 6.30		200 / 7.87	
Tool disc size	mm / inch	290 11.41	340 13.38	330 12.98	420 16.53	420 16.53	420 16.53	480 18.89	480 18.89	480 18.89	480 18.89	483 19.0	600 23.61
Clamping Force	kgf	2646		3840		5780		7060		8790		13900	
Rotation and Clamping (theoretical value)	Sec.	0.52	0.49	0.7	0.64	0.86	0.8	0.9	0.84	0.87	0.81	1.9	1.6
Total Indexing Time for 180° (include clamping) (theoretical value)	Sec.	0.79		1.21		1.37		1.4		1.38		4.6	
Hydraulic Working Pressure	kgf /cm²	35±3		35±3		40±3		40±3		40±3		40±3	
Flow Rate	L / min	20		20		20		20		30		30	
Indexing Accuracy (theoretical value)	Sec.	±2"		±2"		±2"		±2"		±2"		±2"	
Accuracy of Repeatability (theoretical value)	Sec.	±1"		±1"		±1"		±1"		±1"		±1"	
Servo Motor Type		MITSUBISHI HG-SR52JK		MITSUBISHI HG-SR102JK		MITSUBISHI HG-SR102JK		MITSUBISHI HG-SR102JK		MITSUBISHI HG-SR102JK		MITSUBISHI HG-SR81JK	
Gear Ratio		24:1		45:1		45:1		45:1		45:1		24:1 (Add Gearbox 120:1)	
Motor Stalling Torque	N.m	2.4		4.8		4.8		4.8		4.8		8.1	
Diameter of Coupling & Type	mm / inch	Ø125 / Ø4.92 3 pcs		Ø150 / Ø5.90 3 pcs		Ø180 / Ø7.08 3 pcs		Ø185 / Ø7.28 3 pcs		Ø230 / Ø9.05 3 pcs		Ø270 / Ø10.62 3 pcs	

※ GSA remains the right of modification. All specifications can be modified according to customers' requirement.

CLT-100SB-12T

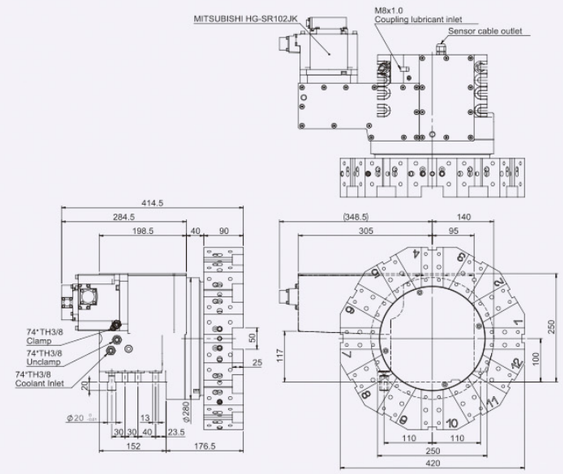

CLT-160SA-12T

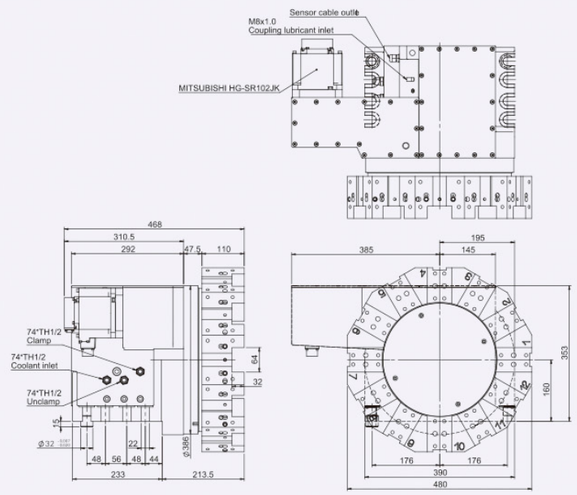

CLT-200SB-12T

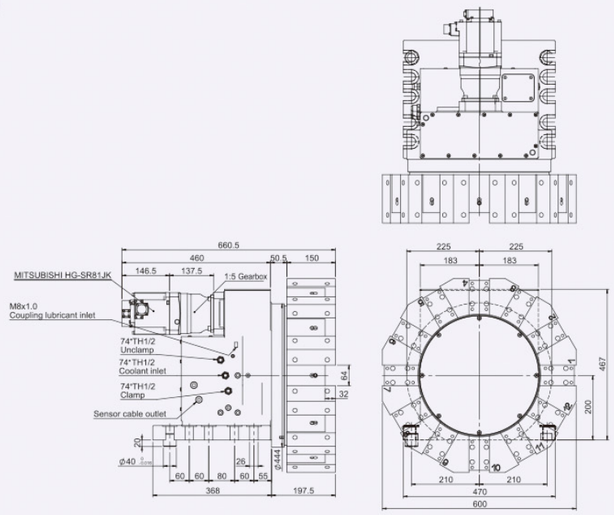

CLT

Power Tooling Turret

GSA+
GSA TECHNOLOGY CO., LTD.

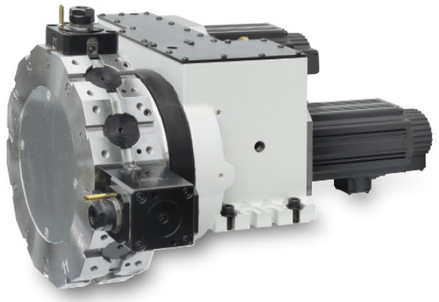

CLT-80SPB(V)-12T

- Type of Lathe Turret
- Center Height
- Servo Motor Drive
- Power
- BMT(VDI)
- Allowed Number of Tools

◎ Spindle Motor can be changed according to different controller model such as SIEMENS and MITSUBISHI.
◎ Adopting tool disc model of VDI or BMT type, position accuracy can be reached 0.01mm (without tool holder), concentricity can be reached 0.005mm.

◎ Maximum speed of the power tooling can be reached 5,000/6,000 rpm with strong clamping force which is suitable for heavy cutting such as milling, drilling and tapping machining.
◎ Adopting interface coupling of power tool holder with DIN 1809 type.
◎ Adopting 3 pcs Hirth Coupling & Hydraulic Clamping /Unclamping System suitable for heavy cutting long term operation.
◎ There is need 0.1 sec. only with speedy rotation time(adjacent), Indexing accuracy:±2 sec. Accuracy of repeatability:±1 sec.
◎ Changing time between in rotating position and power tooling within one second.
◎ Low noise and high durability.

ITEM / MODEL		CLT-80SPB		CLT-100SPB	CLT-125SPB		CLT-160SPB		CLT-200SPB
Allowed Number of Tools	N	12		12	12		12		12
Center Height	mm / inch	80 / 3.15		100 / 3.93	125 / 4.92		160 / 6.30		200 / 7.87
Tool disc size	mm / inch	310 12.20	350 13.77	350 13.77	350 13.77	380 14.95	430 16.92	520 20.46	520 20.46
Clamping Force	kgf	2646		3840	5780		8790		13900
Rotation and Clamping (theoretical value)	Sec.	0.49		0.64	0.8		0.93		1.6
Total Indexing Time for 180° (include clamping) (theoretical value)	Sec.	0.79		1.21	1.37		2		4.6
Hydraulic Working Pressure	kgf /cm²	35±3		35±3	40±3		40±3		40±3
Flow Rate	L / min	20		20	20		20		30
Servo Motor Type		MITSUBISHI HG-SR52JK		MITSUBISHI HG-SR102JK	MITSUBISHI HG-SR102JK		MITSUBISHI HG-SR102JK		MITSUBISHI HG-SR81JK
Gear Ratio		24:1		45:1	45:1		45:1		120:1
Motor Stalling Torque	N.m	2.4		4.8	4.8		4.8		8.1
Diameter of Coupling & Type	mm / inch	Ø125 / Ø4.92 3 pcs		Ø150 / Ø5.90 3 pcs	Ø180 / Ø7.08 3 pcs		Ø230 / Ø9.05 3 pcs		Ø270 / Ø10.62 3 pcs
Spindle motor type		FANUC αi12-10000		FANUC αi12-10000	FANUC αi12-10000	FANUC αi3-10000	FANUC αi65-10000	FANUC αi15-7000	FANUC αi15-7000
Tool holder shaft size		BMT45	BMT55	BMT55	BMT55	BMT65	BMT75	BMT85	BMT85
Rotating tool holder coupling		DIN 1809		DIN 1809	DIN 1809		DIN 1809		DIN 1809
Gear ratio for power tooling		1:1		1:1	1:1		1:1		1:1
Tool holder Max.speed	rpm	5000		5000	5000		4000	3500	3500

※ GSA remains the right of modification. All specifications can be modified according to customers' requirement.

CLT-100SPB-12T(BMT55)

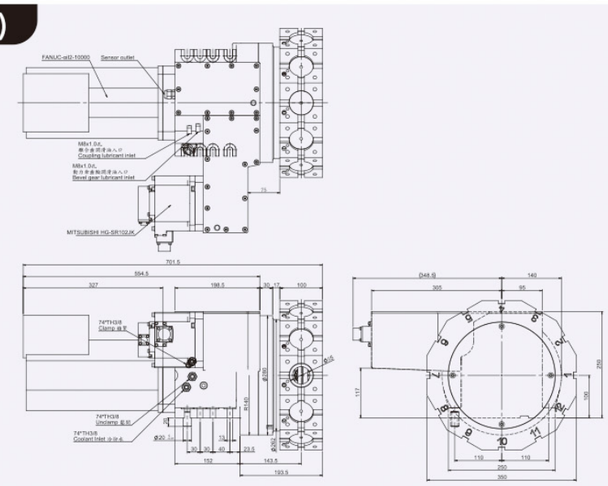

CLT-160SPB-12T(BMT75)

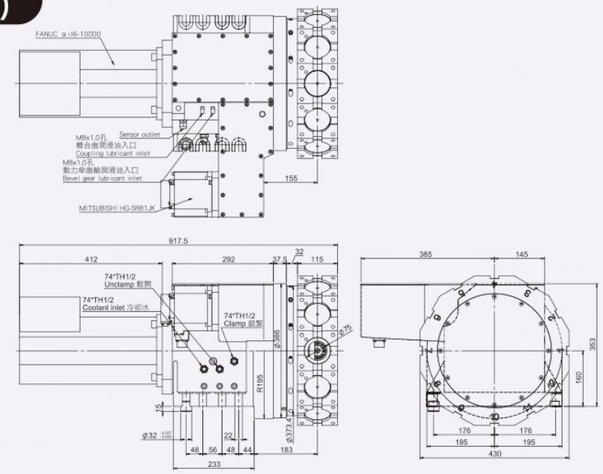

CLT-200SPB-12T(BMT85)

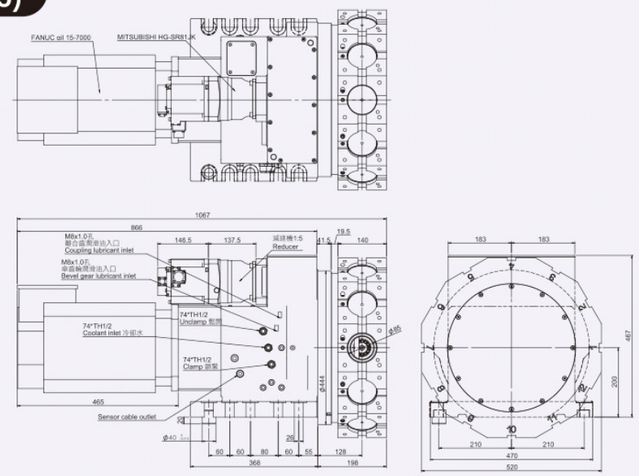

CLT

Hydraulic Hirthpost

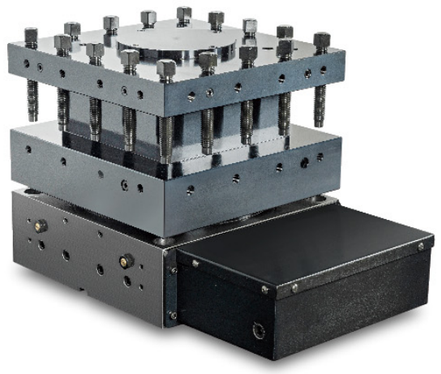

HP-250-F4

- Type of Lathe Hydraulic Hirthpost
- Carrier Dia.
- Allowed Number of Tools

◎ Suitable for large for large type & vertical CNC lathe.
◎ Smart selection of nearby tools.
◎ Build-in 2pcs hirth coupling, repeatability: ±1 sec.
◎ With coolant holes.
◎ With compact design & high durability, suitable for heavy cutting.

ITEM / MODEL		HP-250-F4	HP-250-F6	HP-350-F4	HP-350-F6	HP-451S
Carrier Dia.	mm / inch	250 / 9.84	250 / 9.84	350 / 13.77	350 / 13.77	450 / 17.71
Division		4 Equal Parts	6 Equal Parts	4 Equal Parts	6 Equal Parts	8/6/4 Equal Parts
Clamp / Unclamp		8.5		5		5.5
Rotating Driving Volume		Left or Right		Left or Right		Left or Right
Hydraulic Driving Volume	C.C	103		276		–
Driving Type		Hydraulic Electric		Hydraulic Electric		Servo Driving
Clamp Force	kgf	2060 (hydraulic 35kg/cm²)		3298 (hydraulic 35kg/cm²)		7300 (hydraulic 35kg/cm²)
Rotating Torque	kgf · m	9.8 (hydraulic 35kg/cm²)		35 (hydraulic 35kg/cm²)		–
Hirth Coupling Size (2pcs)	mm / inch	24 x 210 / 0.94 x 8.26 (teeth x dia.)		24 x 280 / 0.94 x 11.02 (teeth x dia.)		48 x 380 / 1.89 x 14.95 (teeth x dia.)
Indexing Accuracy (theoretical value)	Sec.	±3"		±3"		±3"
Accuracy of Repeatability (theoretical value)	Sec.	±1"		±1"		±1"
Net Weight	kgs	90	97	240	300	550
Suitable Output of Spindle	kw	11.0		30.0		40.0

※ GSA remains the right of modification. All specifications can be modified according to customers' requirement.

GSA+
GSA TECHNOLOGY CO., LTD.

HP-250-F4

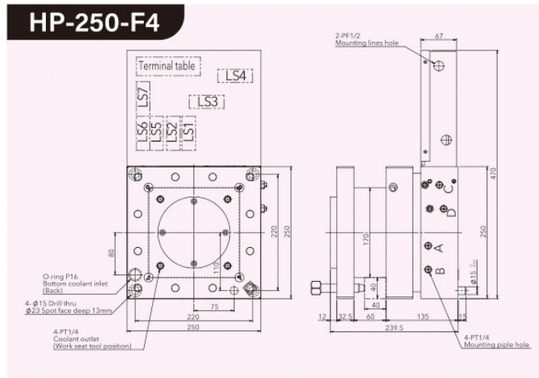

HP-350-F4

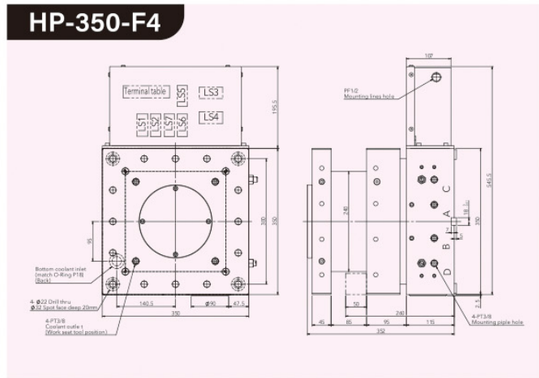

HP-451S-F8

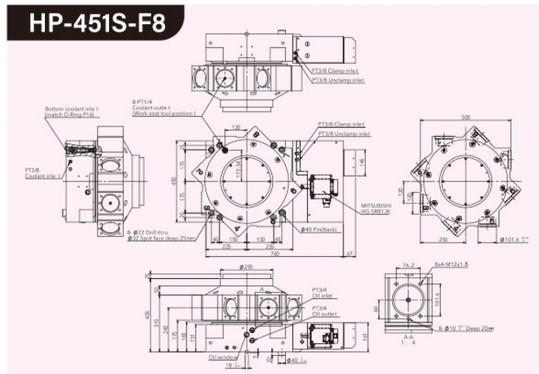

Electrical sequence chart

HP-250-F4

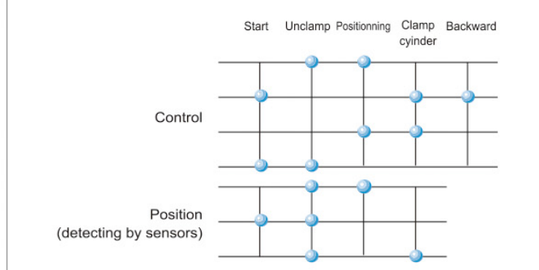

HP-350-F4

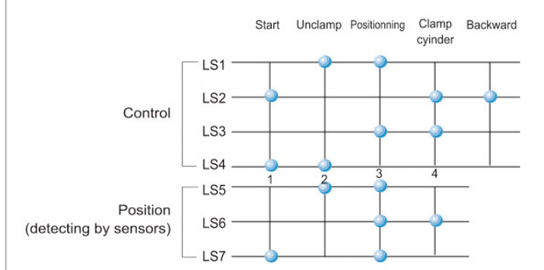

HP-250-F6

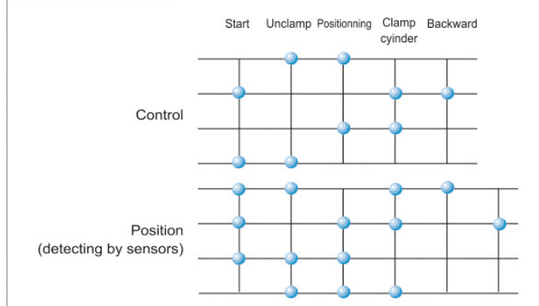

HP-350-F6

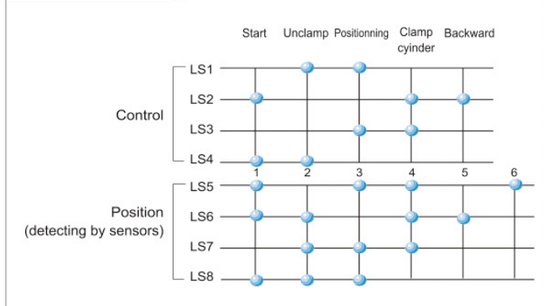

HP

Application of Products

CLT-63-8T (Hydraulic Turret)

Application: CNC Lathe

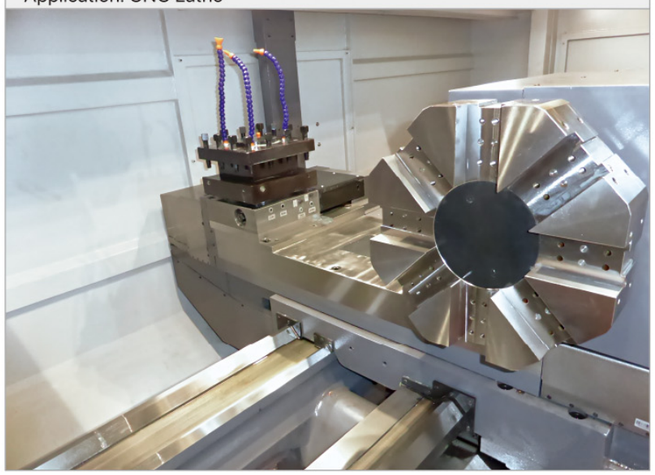

CLT-100-12T + CLT-100L-12T(Hydraulic Turret)

Application: Two spindle CNC Lathe

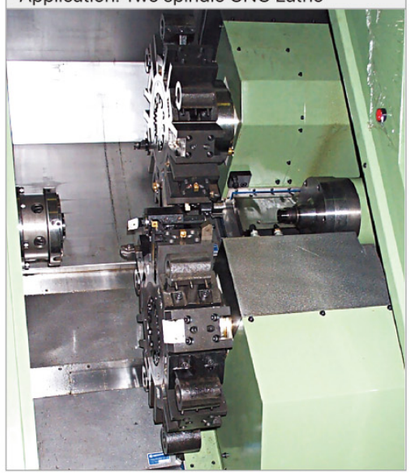

CLT-100SPV (Power Tooling Turret)

Application: CNC Lathe

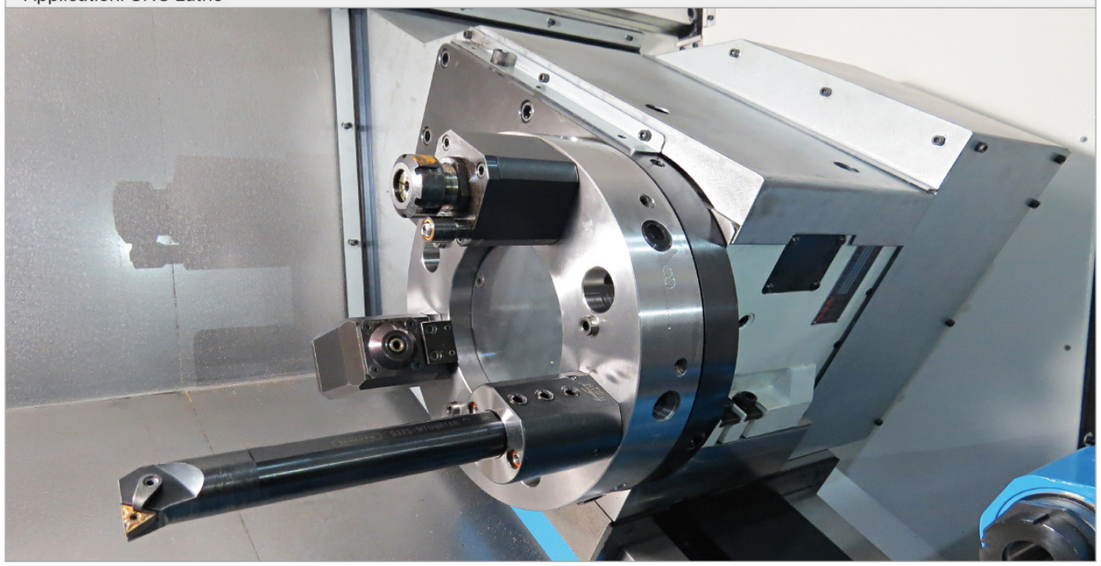

HP-350-F6

Application: CNC Flat Type Lathe

HP-350-F4

Application: CNC Flat Type Lathe

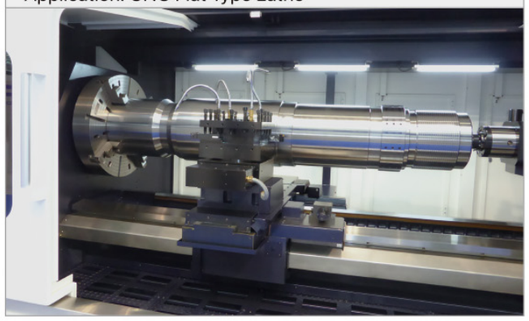

Machining Facilities

GSA+
GSA TECHNOLOGY CO., LTD.

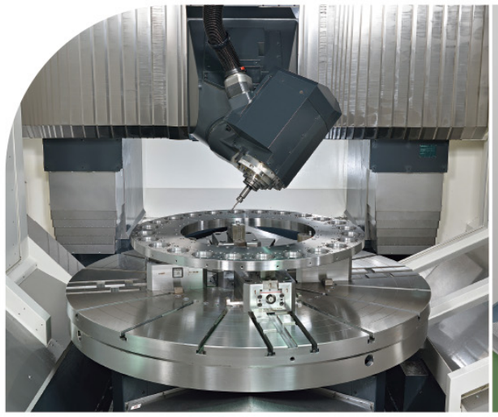

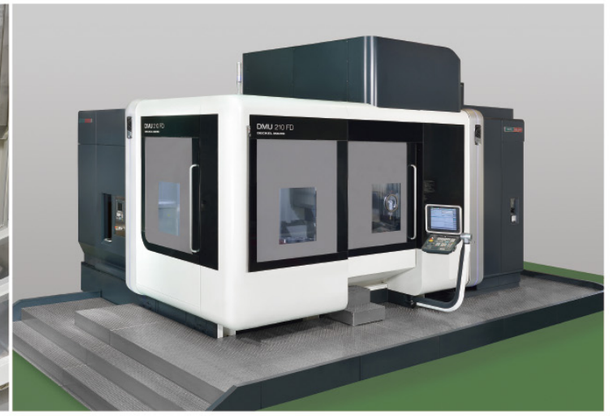

Adopting GERMANY made DMG 5 Axes Turning / Milling / Grinding High-End Mahcine.

Machining Job: High Precision Large Size Work-Piece. DIA. within 2,000mm.

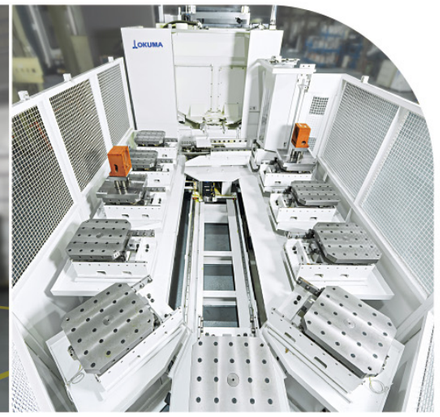

Adopting OKUMA CNC Horizontal Machining Center for Housing Machining

Adopting OKUMA CNC Horizontal Machining Center for Housing and Tool-Disc Machining

Machining Facilities

Adopting 5-Face CNC Double Column Machining Center for Large Size Housing Machining.

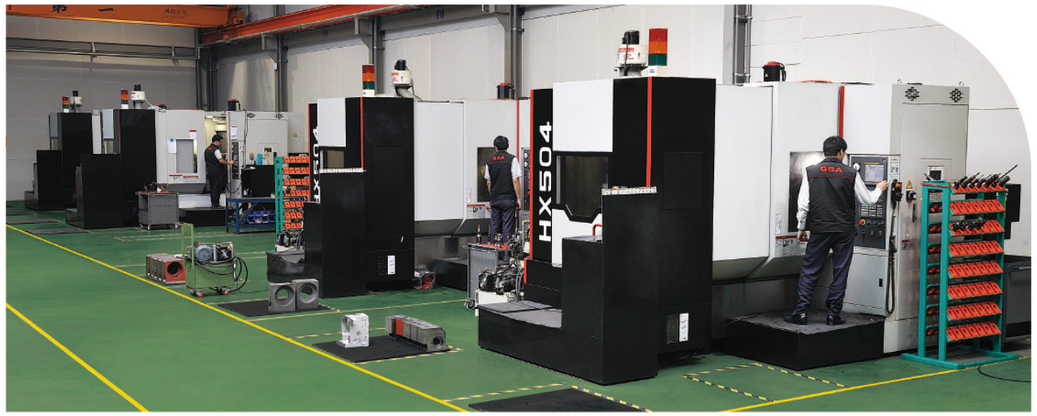

High Precision Horizontal Machining Center for Housing Machining.

ITALY made Automatic Warehousing System

Q. C. SYSTEM

GSA+
GSA TECHNOLOGY CO., LTD.

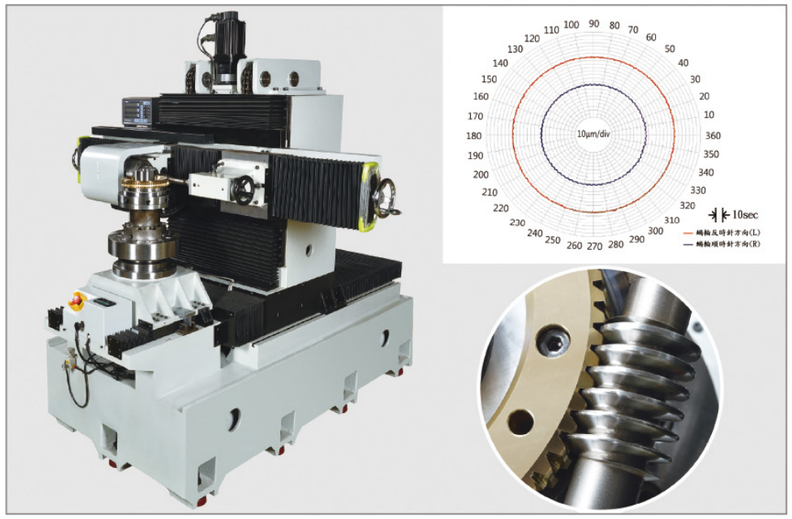

Suface Contact and Pitch Error Testing for Worm Gear System.

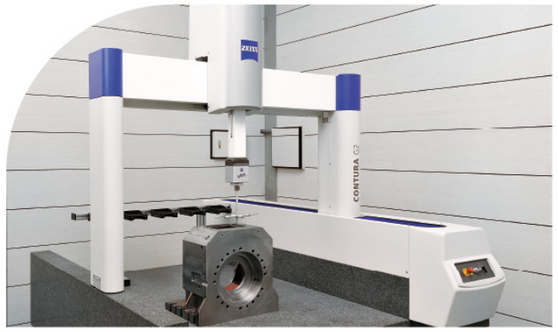

3D Measuring Machine from ZEISS Germany

- Featrue: Measure geometric accuracy error for all components.
- Accuracy: 1.9μ + L/300mm

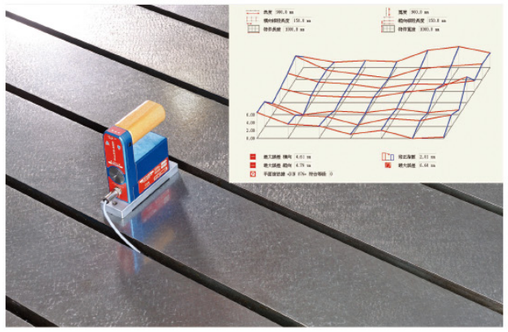

Electronic Level Device from Wyler Switzerland

- Featrue: Inspect top flatness of large size rotary table.
- Accuracy: 0.001 mm/m

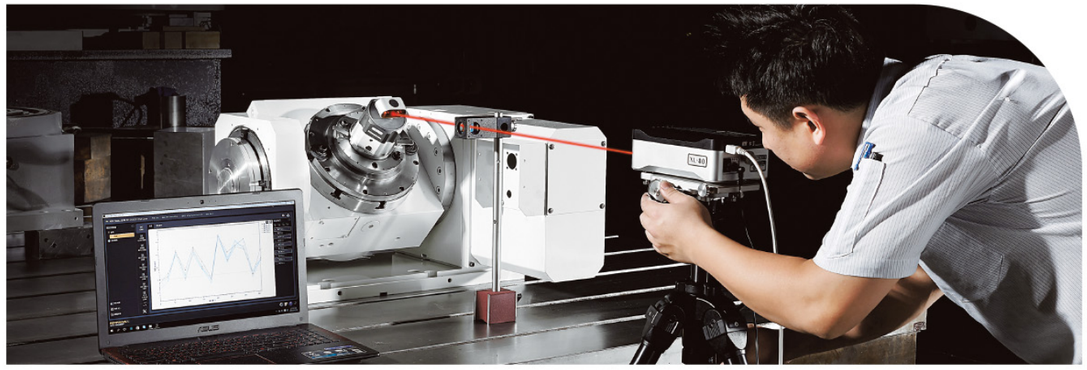

RENISHAW Two Axes Calibrator

- Featrue: Inspect 2 axes angle accuracy.
- Accuracy: ±1 arc sec.

MEMO

GSA+
GSA TECHNOLOGY CO., LTD.