UNISORB®
INSTALLATION TECHNOLOGIES

Unisorb RK Series Fixator Precision Levelers

The World leader in precision anchoring and alignment technolgies.

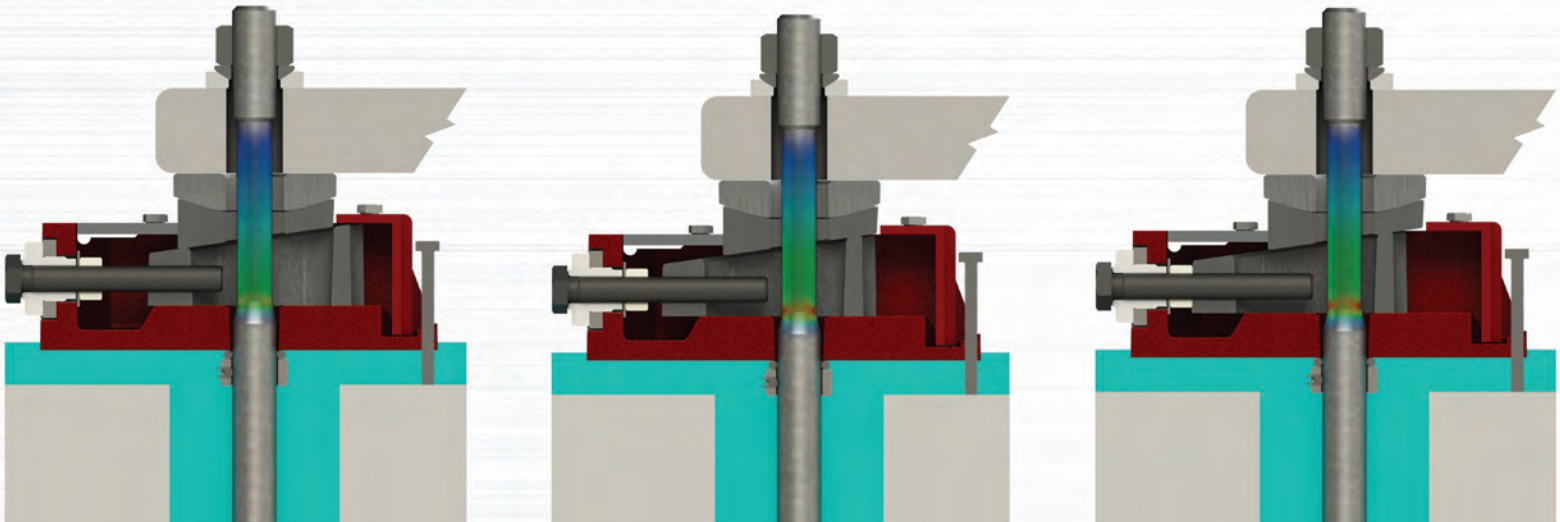

UNISORB®

INSTALLATION TECHNOLOGIES
www.unisorb.com

Scan QR Code For Full Product Data

ISO-9001 Certified

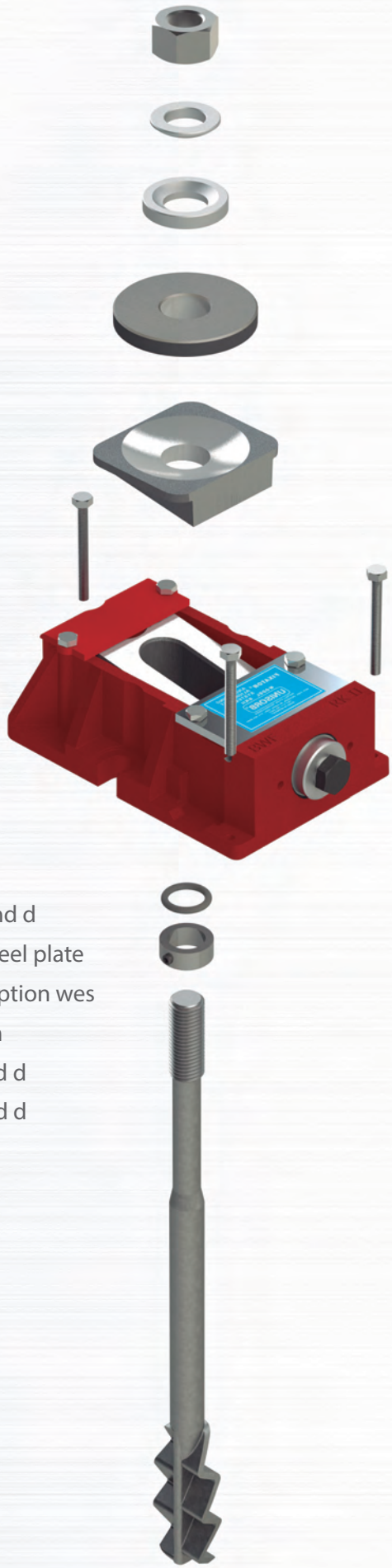

TABLE OF CONTENTS

1 RK Fixator Applications

2 RK Fixator Technical Specifications

3 RK Fixator Option Specifications

- 3 - Options wes and we/2
- 4 - Option p, r and z
- 5 - Options ste and ste/2
- 6 - Options c and le
- 7 - Options d and dz
- 8 - Option m
- 9 - Options les, mon and frot

10 RK Fixator Installation Instructions

14 Standard Installation Drawings

- 14 - Option wes
- 15 - Option ste on steel plate
- 16 - Steel plates and option ste
- 17 - Option ste
- 18 - Options ste and c
- 19 - Options ste, c and d
- 20 - Options wes and m
- 21 - Options wes, m and d
- 22 - Options wes on steel plate
- 23 - Steel plates and option wes
- 24 - Options ste and m
- 25 - Options ste, m and d
- 26 - Options wes, c and d

27 Suggested Grout Quantities

28 Proper Grouting Procedure

- 28 - Cement-based grout
- 29 - Standard V-100 Epoxy Grout

Copyright UNISORB® 2019

5/19 JDM/EFB
Rev. 1: 6/19

RK Fixator Applications

Why Unisorb RK Fixators?

In any machinery installation the question must be asked "is this machine support critical?" In other words, does it require support from its foundation to maintain critical alignments between machine elements? A few examples of machines that typically fall within this category are long bed lathes (over 48"), long bed grinders (over 48"), horizontal boring mills, etc. Some helpful criteria may include any machine with rapid changes in load caused by motion of any element, machines which are equipped with leveling devices by the builder, most machines working with high precision parts over 50 lbs. in weight or any machine whose installation instructions call for precision geometric alignment at installation.

The Unisorb® RK Fixator® System is the finest anchoring/alignment product in the world. It makes support critical machinery installations fast and simple. Each application is engineered by Unisorb's Engineers to assure successful implementation and results.

Not only are anchoring/alignment installations fast and easy, longevity of holding alignment lessens down time. Realignments can be achieved without loosening the anchor nuts, and can be done whenever necessary. Unlike conventional leveling methods that require repeated trial and error jacking and tightening during machine installation, the RK Fixator® System permits alignment adjustment to be made after anchor nuts are tight. The only tool required to adjust the Fixator® is a small hand wrench.

The patented RK Fixator® system levels and aligns machinery to tenths (.0001"), achieving micro alignment tolerances. Precision machined Molykoted surfaces, limited backlash and high mechanical advantage make it possible to vary height adjustments at anytime, even under maximum loads. The time-consuming work and production losses usually associated with aligning are eliminated. Machines remain in service, and machine life is prolonged.

Other important benefits include built-in compensation for uneven areas in foundations or machine bases, and true vertical lift (made possible by a three-piece wedge design) to eliminate lateral forces as machines are raised or lowered. The RK Fixator® System also affords the most rigid machine-to-foundation connection available. RK Fixator® System is available in six sizes with a wide choice of optional equipment that adapt the system to meet any installation required.

The RK FIXATOR Basic Units are painted at manufacture and require no further treatment for normal machine tool applications. All load-bearing surfaces are Molykoted at manufacture and require no further attention during the life of the unit. Under normal circumstances, the adjusting bolt should move easily under any loading, requiring only the use of a small hand wrench. The anchor bolts supplied with the FIXATORS are of a special design to allow high yield force clamping with no reduction in strength or anchoring power.

The above listed advantages of the Unisorb RK Fixator® System have been consistently found to out-weigh any additional expense necessary to purchase the units.

RK FIXATOR TECHNICAL SPECIFICATIONS

UNISORB®
INSTALLATION TECHNOLOGIES

BOX 1000, JACKSON, MI 49204-1000
888-4-UNISORB • 517-764-6060
FAX 517-764-5607 • www.unisorb.com

DESCRIPTION	DIM.	RKI	RKII	RKIII	RKIV	RKV	RKVI
Recommeended machine dead weight [1]	lbs.	2,200	4,400	8,900	13,400	26,900	44,900
Maximum allowable lifting load per FIXATOR	lbs.	20,000	26,500	53,500	80,500	157,000	269,500
Spring constant	lb./in.	11,420,000	25,695,000	45,681,000	57,101,000	79,942,000	102,782,000
Vertical adjustment per revolution of height adjusting screw	in.	0.010	0.010	0.012	0.014	0.017	0.020
Maximum vertical adjustment	in.	0.20	0.20	0.24	0.32*	0.40	0.51
Appromimate torque required to turn adjusting screw	ft. lb./1000lbs. load	1.0	1.0	1.3	1.5	1.8	2.3
Maximum allowable torque on adjusting screw	ft. lb.	20	27	71	118	284	516
Thread dimensions	M x S	16 x 2mm	20 x 2.5mm	24 x 3mm	30 x 3.5mm	36 x 4mm	48 x 5mm
Approximate torque on anchor bolt nut at yield point of bolt	ft. lb.	103	199	332	664	1,180	2,729
Approximate tension on anchor bolt at yield point	lbs.	11,900	18,200	25,800	40,900	59,500	105,600
Weight of Basic Unit	lbs.	8.8	12.1	25.3	46.2	92.4	154.3

[1] Includes machine dead weight and anchor bolt preload at yield point. ** .24 WITH 2" DIA. BOLT*

DIMENSIONS***

SIZE RK	M	L	B	H**	DØ	SW	EØ	d	c	z	h	I	b	e_1	e_2	k	X	Y	f_1Ø	f_2Ø	f_3Ø
I	M12	6.89	4.13	2.17	2.36	19mm	.79	.63	.83	.51	.20	3.62	3.54	.55	1.02	.47	3.27	7.52	.67	.75	-----
II	M20	7.01	4.72	2.95	2.95	19mm	1.02	.59	1.22	.59	.20	3.78	3.94	.55	1.02	.51	3.23	7.60	.83	.98	-----
III	M24	8.66	5.91	3.74	3.54	24mm	1.26	.87	1.57	.67	.24	4.65	5.12	.71	1.26	.87	4.02	9.53	.98	1.22	-----
IV	M30	10.83	7.09	4.53	4.33	30mm	1.57	.94	1.93	.67	.31	5.59	6.30	.94	1.50	.94	5.24	11.77	1.22	1.46	-----
V	M36	13.58	9.06	5.31	5.91	36mm	1.81	1.34	2.28	.79	.39	7.09	8.07	1.10	1.81	1.34	6.50	14.92	1.46	1.73	-----
VI	M42	16.54	10.63	6.50	7.87	46mm	3.15	1.34	2.64	1.26	.51	9.06	9.65	1.10	1.81	1.22	7.48	17.87	2.28	-----	-----

***HEIGHT WITH MACHINED BASE (OPTION b), FOR STANDARD CASTING ADD 0.08" (APPROX.)* ****CASTING DIMENSIONS MAY VARY*

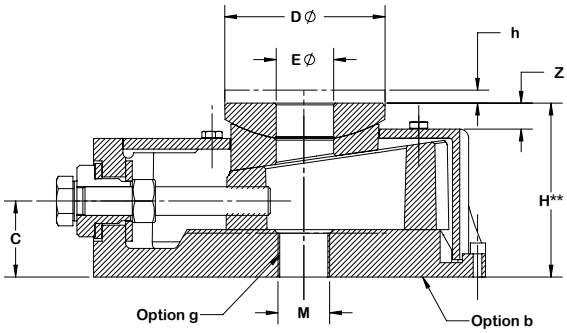

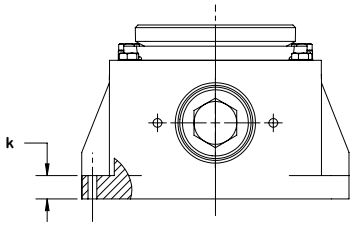

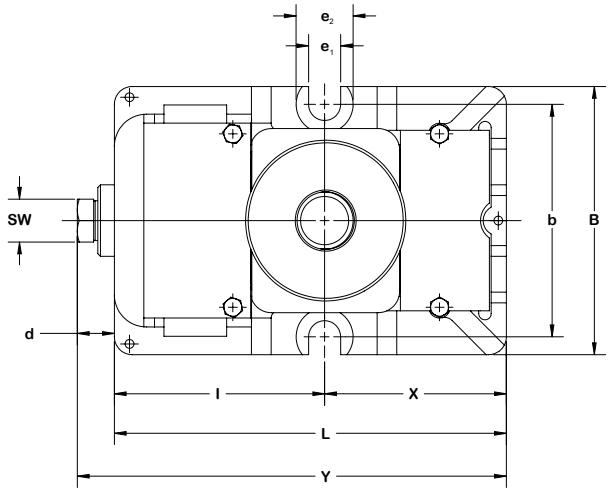

Option *f*

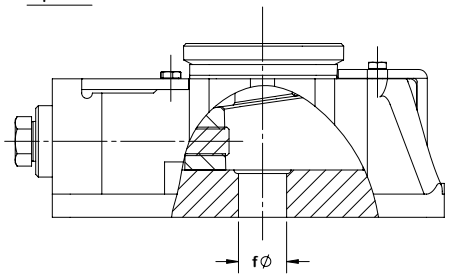

Hole f_1 for Option **wes**

Hole f_2 for Option **we/2** or oversize **wes**

DIMENSIONS IN INCHES UNLESS OTHERWISE SHOWN

RK Fixator Option Specifications

wes

Through Type Anchor/Hold Down Stud for the direct connection of the machine to the foundation.

Note: Specify "f1" (Basic Model Option) in your order.

Sizes II, III and IV permit the use of the next size larger anchor bolt to improve safety under extremely high tensile loads. When selecting the anchor, however, the maximum allowable load must never be exeeded.

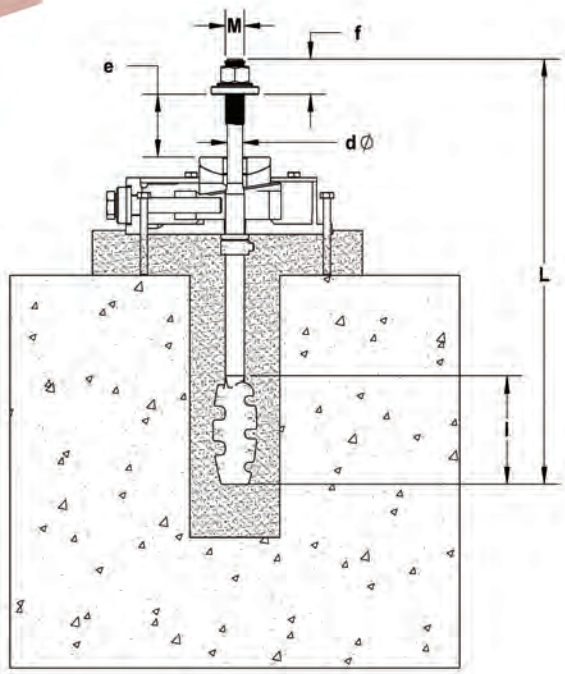

DIMENSIONS								
RK	M	L	l	f	dØ	'e'		Approx. Clamping Force lbs.
						from	to	
I	M16	12.99	3.54	1.18	.51	.79	2.36	11,900
II	M20	15.75	4.33	1.57	.63	.79	3.54	18,200
III	M24	19.69	5.12	1.97	.75	1.18	3.94	25,800
IV	M30	23.62	5.91	2.17	.94	1.38	5.31	40,900
V	M36	31.50	7.09	2.56	1.14	1.57	5.91	59,500
	M42	39.37	10.24	2.95	1.38	1.57	7.87	86,500

we/2

TWO-PIECE Through Type Anchor/Hold Down Stud for the direct connection of the machine to the foundation.

Note: Specify "f_2" (Basic Model Option) and dimension "e" (thickness of machine foot) in your order. Model RKV Fixator will require a 47mm option "f".

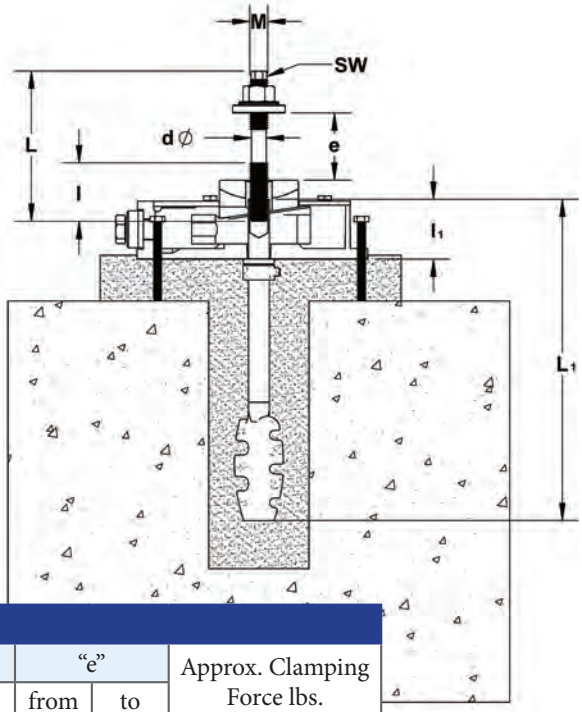

DIMENSIONS													
RK	M	L_1	dØ	Width a/f SW	Short we/2		'e'		Long we/2		"e"		Approx. Clamping Force lbs.
					L	l	from	to	L	l	from	to	
I	M16	12.99	.51	10mm	5.12	2.17	.79	2.17	6.10	2.36	2.36	3.15	11,900
II	M20	15.75	.63	13mm	5.51	1.97	.79	1.97	7.48	3.15	2.17	3.94	18,200
III	M24	19.69	.75	17mm	6.50	2.36	1.18	2.36	8.86	3.54	2.56	4.72	25,800
IV	M30	23.62	.94	19mm	7.48	2.76	1.38	2.76	10.04	4.33	2.95	5.31	40,900
V	M36	31.50	1.14	24mm	8.66	3.15	1.57	3.15	10.83	4.72	3.35	5.31	59,500

p

Spherical Washer Set for non-parallel bearing surfaces.

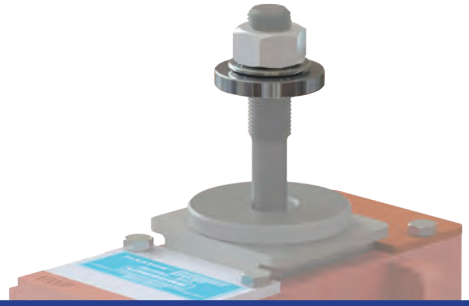

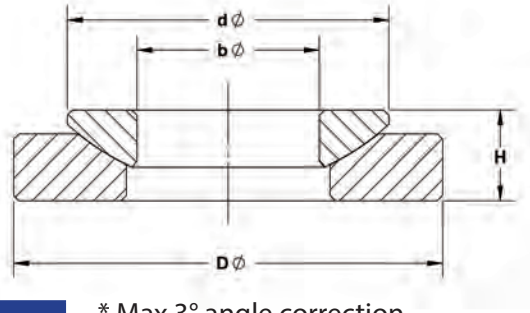

* Max 3° angle correction.

DIMENSIONS				
RK	DØ	H	dØ	bØ
I	1.55	.34	1.16	.67
II	1.73	.39	1.42	.83
III	2.20	.51	1.73	.98
IV	2.68	.63	2.20	1.22
V M36	3.07	.79	2.68	1.46
VM42	3.94	1.02	3.54	1.81

r

Oversized Spherical Washer Set for non-parallel bearing surfaces.

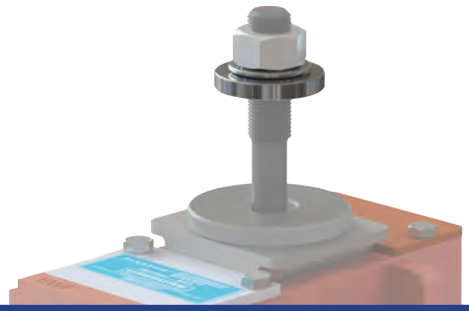

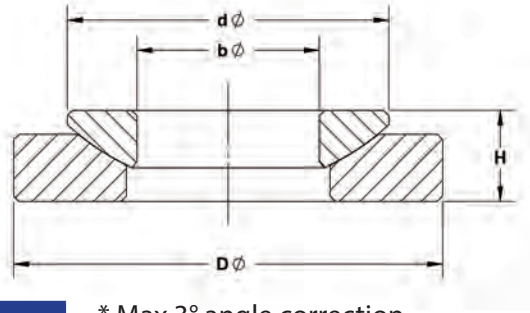

* Max 3° angle correction.

DIMENSIONS				
RK	DØ	H	dØ	bØ
I	1.73	.39	1.42	.67
II	2.20	.51	1.73	.83
III	2.68	.63	2.20	.98
IV	3.07	.79	2.68	1.22
V M36	3.94	.79	2.68	1.46
VM42	4.92	1.02	3.54	1.81

z

Foam Centering Bushing for the concentric location of the anchor bolts in the machine foot holes.

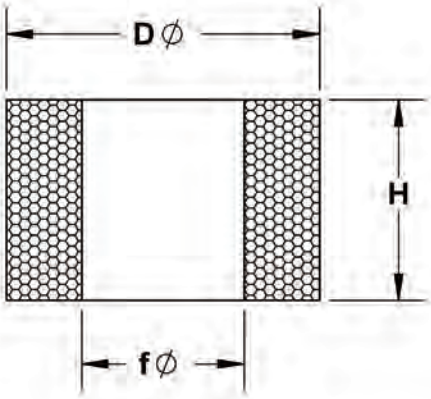

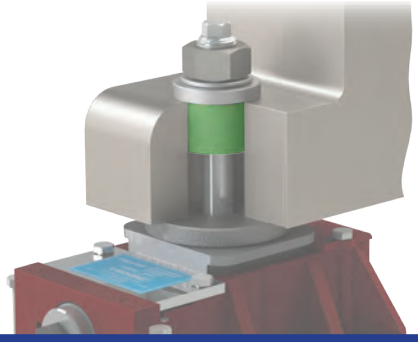

DIMENSIONS			
RK	FØ	DØ	H
I	.62	1.25	1.00
II	.81	1.56	1.00
III	.96	1.75	1.00
IV	1.19	2.13	1.00
V M36	1.44	2.38	1.00
VM42	1.69	2.75	1.00

ste

Normal or Long Center hold Down Stud for attaching the Fixator® to the machine.

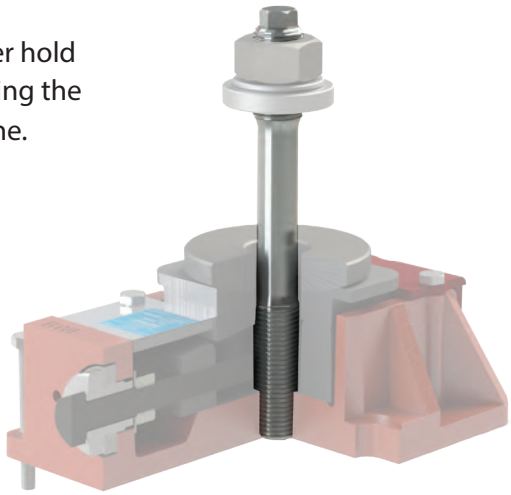

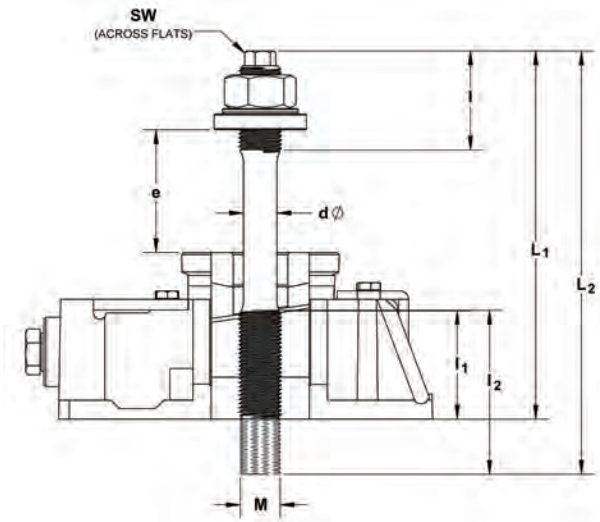

DIMENSIONS														
RK	M	dØ	Width a/f SW	t	l	Normal		'e'		Long		"e"		Approx. Clamping Force lbs.
						L_1	l_1	from	to	L_2	l_2	from	to	
I	--	--	--	--	--	--	--	--	--	--	--	--	--	--
II	M20	.63	13mm	.28	1.38	6.89	2.17	.79	2.17	8.07	3.35	1.97	3.35	18,200
III	M24	.75	17mm	.31	1.97	8.46	2.76	.79	2.76	10.24	4.54	2.56	4.53	25,800
IV	M30	.94	19mm	.31	2.17	10.24	3.35	1.18	3.35	12.20	5.31	3.15	5.31	40,900
V	M36	1.14	24mm	.39	2.56	12.40	4.13	1.57	4.13	14.17	5.90	3.94	5.91	59,500

ste/2

Two-piece Center hold Down Stud for attaching the Fixator® to the machine.

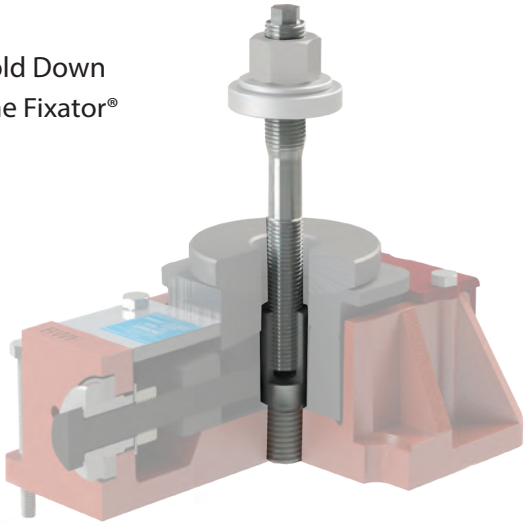

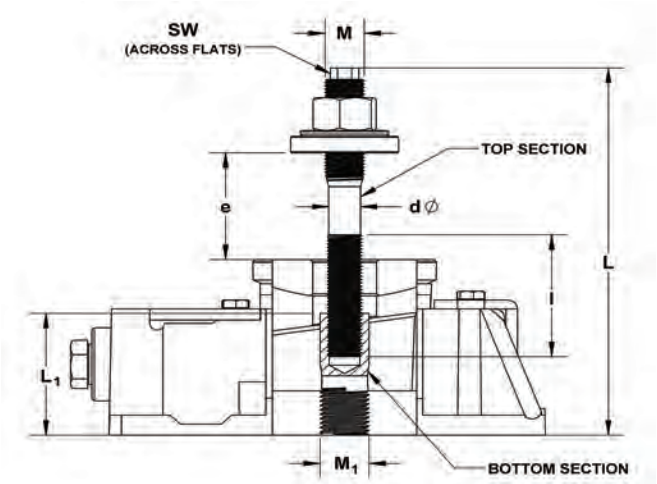

DIMENSIONS														
RK	M	M_1	dØ	Width a/f SW	Short ste/2		'e'		Long ste/2		"e"		L_1	Approx. Clamping Force lbs.
					L	l	from	to	L	l	from	to		
I	--	--	--	--	--	--	--	--	--	--	--	--	--	--
II	M16	M20	.51	10mm	5.12	2.17	.79	2.36	6.10	2.36	2.56	3.35	2.17	11,900
III	M20	M24	.63	13mm	5.51	1.97	.79	1.97	7.48	3.15	2.17	3.94	2.76	18,200
IV	M24	M30	.75	17mm	6.50	2.36	1.18	2.36	8.86	3.54	2.56	4.72	3.35	25,800
V	M30	M36	.94	19mm	7.48	2.76	1.57	2.76	10.04	4.33	2.95	5.31	4.13	40,900

c

Side Anchor Bolts for connecting Fixator® to Foundations.

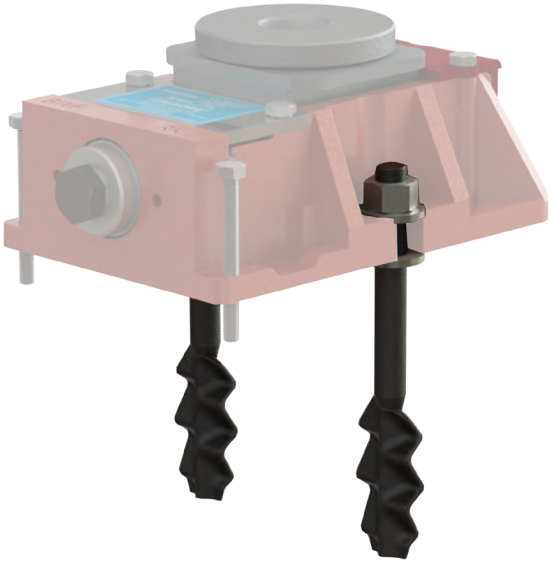

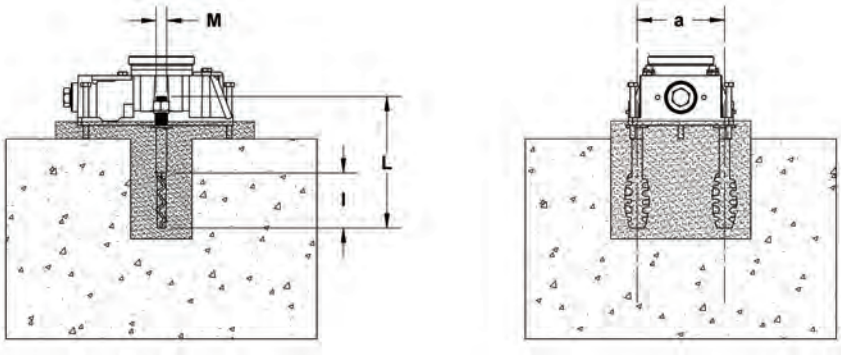

DIMENSIONS					
RK	M	L	l	a	Approx. Clamping Force lbs.
I	M12	5.91	2.76	3.54	14,600
II	M12	5.91	2.76	3.94	14,600
III	M16	9.84	3.54	5.12	26,900
IV	M20	11.81	3.94	6.30	42,700
V	M24	13.78	5.31	8.07	61,800

le

Adjustment Extension for adjusting Fixators® which are located in hard to reach places under machines.

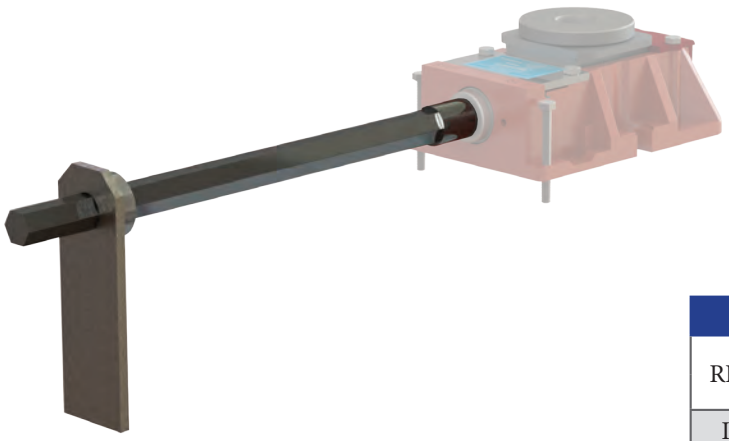

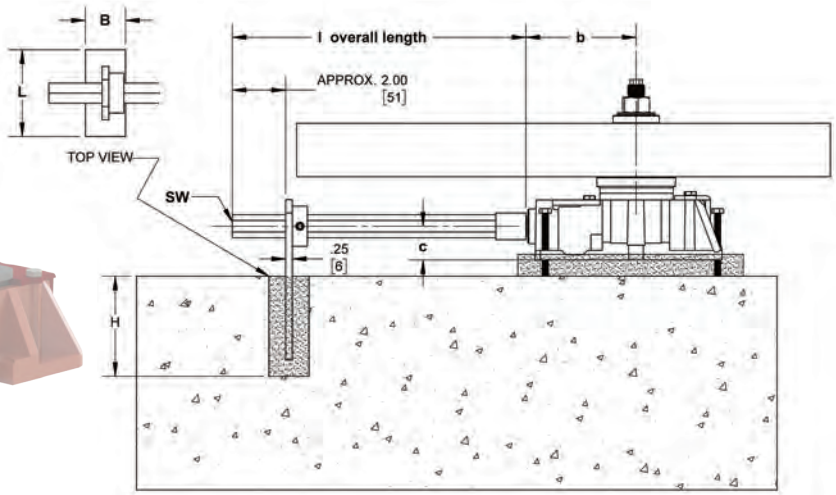

DIMENSIONS							
RK	b	c	l	Width a/f SW	Foundations		
					L	B	H
I	3.87	.83	As Req'd	.75	3.25	1.50	3.75
II	4.03	1.22	As Req'd	.75	3.25	1.50	3.75
III	5.03	1.57	As Req'd	.75	3.25	1.50	3.75
IV	5.97	1.93	As Req'd	.75	3.25	1.50	3.75
V	7.65	2.28	As Req'd	.75	3.25	1.50	3.75

d

Lateral Adjuster for adjusting machine location. (The use of option c is recommended along with option d.)

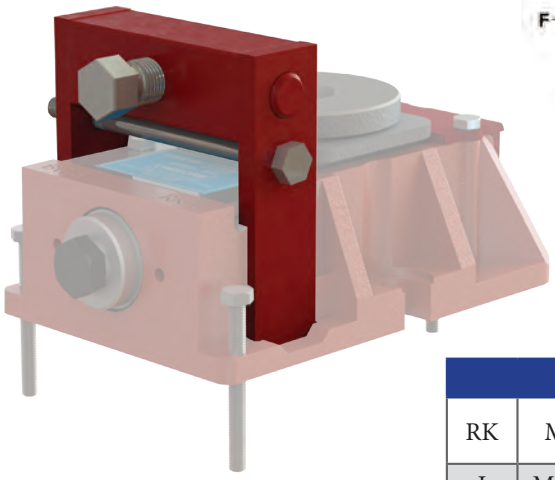

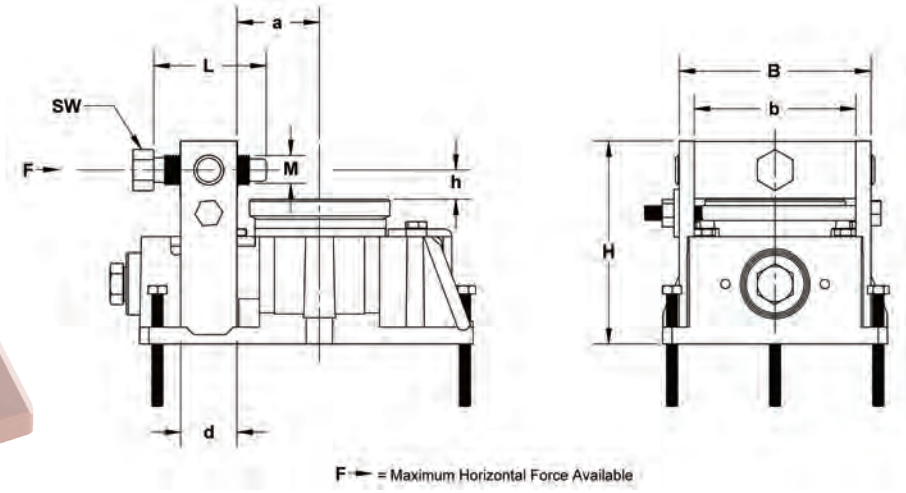

DIMENSIONS										
RK	M	L	Width a/f SW	H	B	b	d	a	h	F→ lbs.
I	M12	1.97	17mm	3.27	3.39	2.76	.98	1.57	.59	4,400
II	M16	2.36	19mm	4.17	4.02	3.39	1.18	1.69	.63	5,600
III	M16	2.36	19mm	5.08	5.08	4.29	1.38	2.17	.63	7,800
IV	M20	2.76	24mm	6.30	5.91	5.12	1.57	2.76	.79	8,900
V	M24	3.15	30mm	7.56	7.83	6.89	1.77	3.54	.94	13,400

dz

Offset Lateral Adjuster for adjusting machine location. (The use of option c is recommended along with option d.)

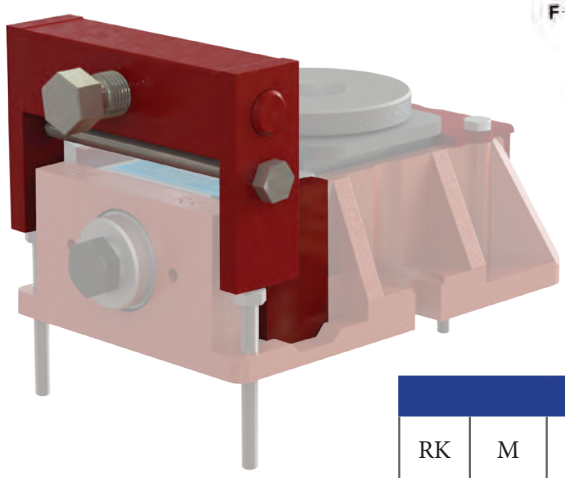

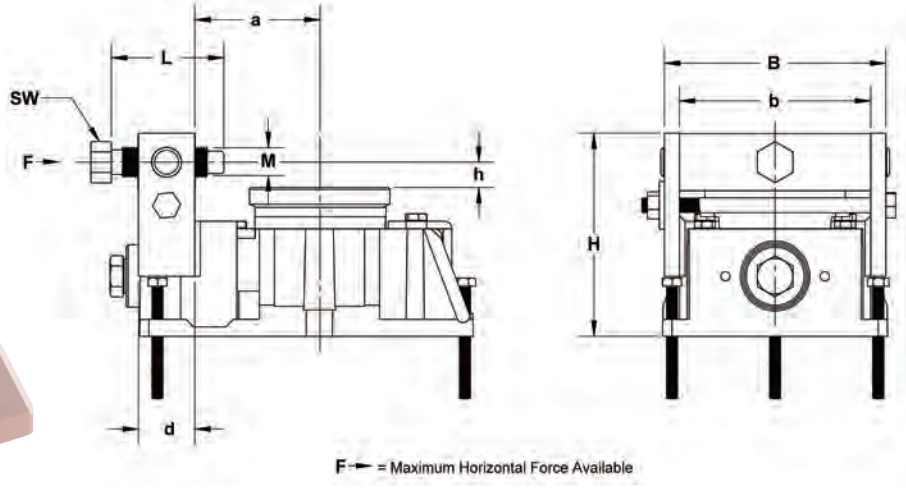

DIMENSIONS										
RK	M	L	Width a/f SW	H	B	b	d	a	h	F→ lbs.
I	M12	1.97	17mm	3.27	4.02	3.39	.98	2.24	.59	4,400
II	M16	2.36	19mm	4.17	4.65	4.02	1.18	2.56	.63	5,600
III	M16	2.36	19mm	5.08	5.87	5.08	1.38	3.15	.63	7,800
IV	M20	2.76	24mm	6.30	6.69	5.91	1.57	3.94	.79	8,900
V	M24	3.15	30mm	7.56	8.78	7.83	1.77	4.84	.94	13,400

m

Adjustment Bolt Enclosure for use with recessed Fixators®.

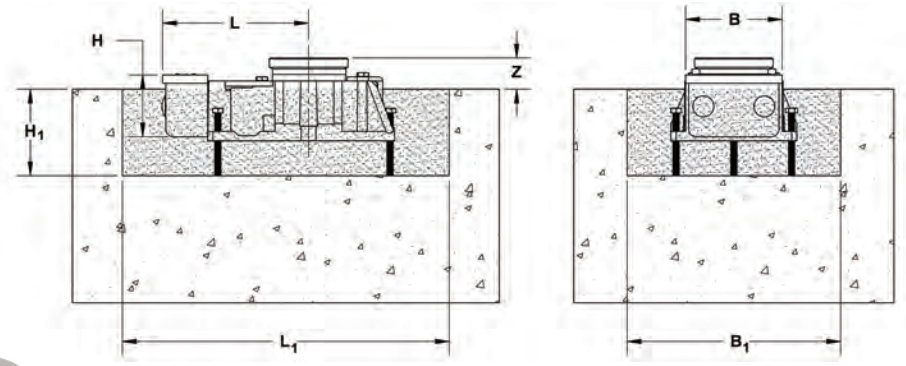

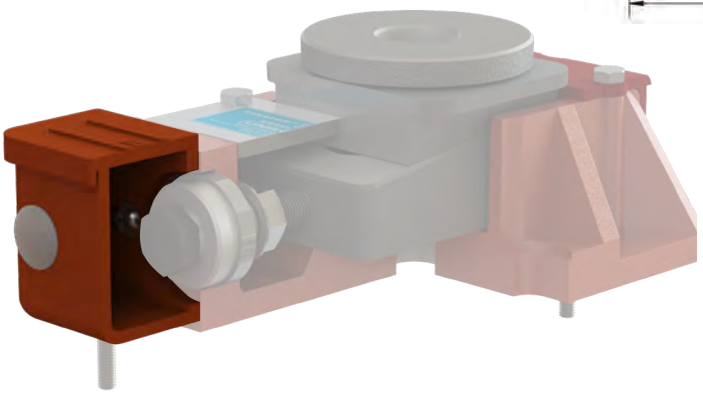

DIMENSIONS							
RK	L	B	H	Z	Foundations		
					L_1	B_1	H_1
I	5.08	3.19	1.85	.79	12.25	6.50	2.75
II	5.43	3.62	2.32	.98	12.25	8.00	3.25
III	6.30	3.62	2.32	1.18	15.00	10.00	4.00
IV	8.11	5.35	3.78	1.38	17.75	12.00	4.75
V	9.65	5.35	3.78	1.57	21.75	13.00	5.50

Recesses in Foundations for Options m + wes combined.

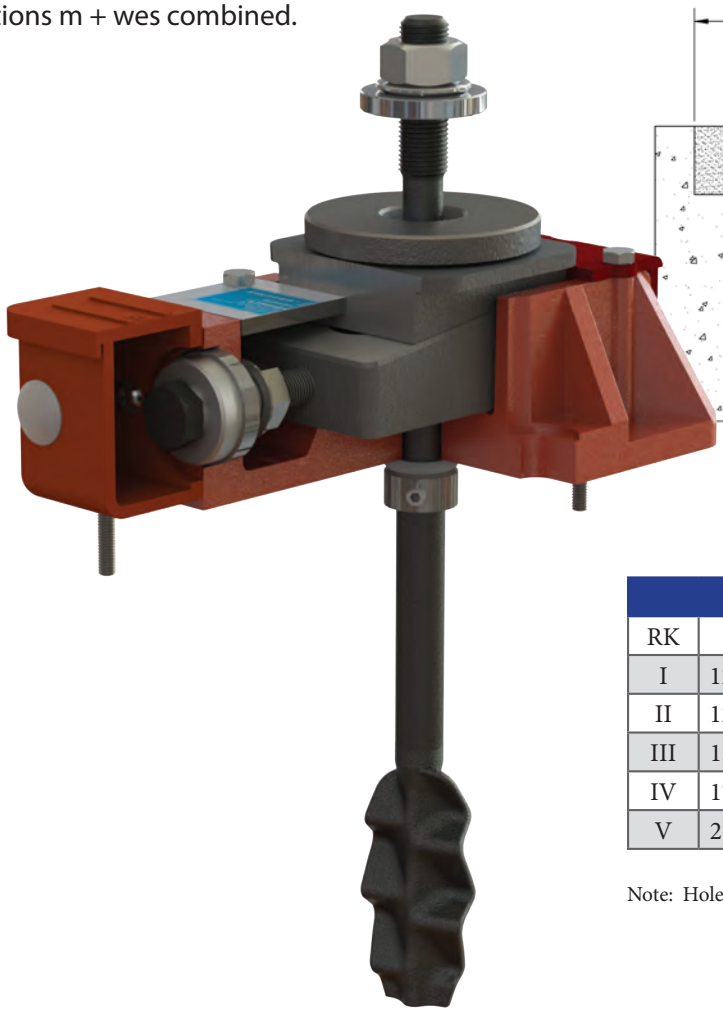

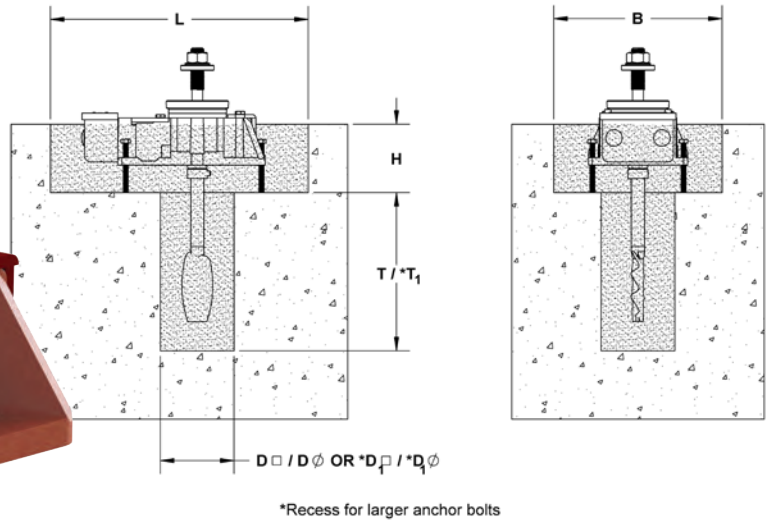

DIMENSIONS							
RK	L	B	H	D	T	*D_1	*T_1
I	12.25	6.50	2.75	3.00	9.50	--	--
II	12.25	8.00	3.25	3.50	10.75	4.00	14.25
III	15.00	10.00	4.00	4.00	13.50	5.00	17.00
IV	17.75	12.00	4.75	5.00	16.25	6.00	23.25
V	21.75	13.00	5.50	6.00	22.50	7.00	30.00

Note: Hole sizes based on using UNISORB V-1 Grout.

les

Enclosed Adjustment Extension for adjusting recessed Fixators® which are located in hard to reach places under machines.

Note: Opt. m to be ordered separately.

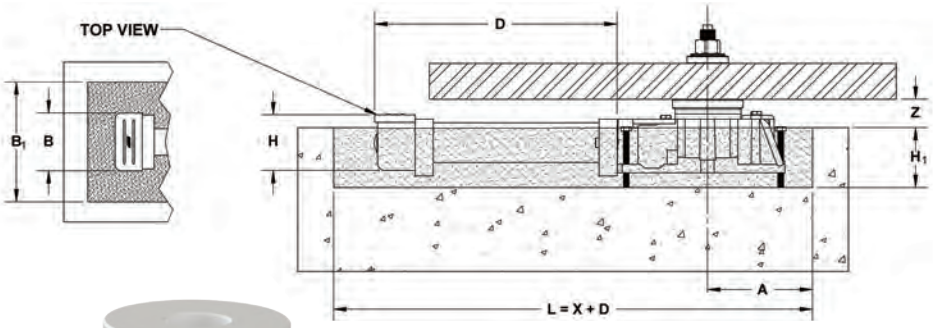

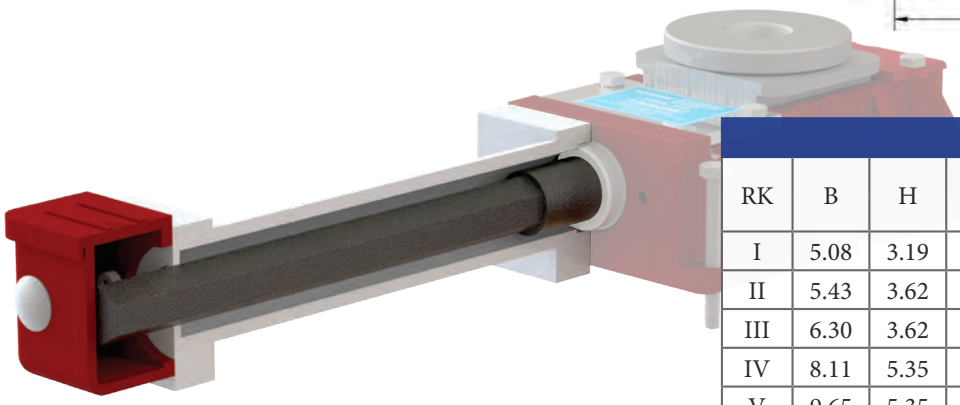

DIMENSIONS								
RK	B	H	Z	Min. Dim.		Foundations		
				D	A	B_1	H_1	X
I	5.08	3.19	.79	As Req'd	5.12	6.50	2.75	10.50
II	5.43	3.62	.98	As Req'd	5.51	8.00	3.25	11.00
III	6.30	3.62	1.18	As Req'd	6.30	10.00	4.00	12.50
IV	8.11	5.35	1.38	As Req'd	7.87	12.00	4.75	15.00
V	9.65	5.35	1.57	As Req'd	9.06	13.00	5.50	17.50

Note: Hole sizes based on using UNISORB V-1 Grout.

mon

Locking System for the top spherical washer.
Note: Requires Opt. f and counterbore.

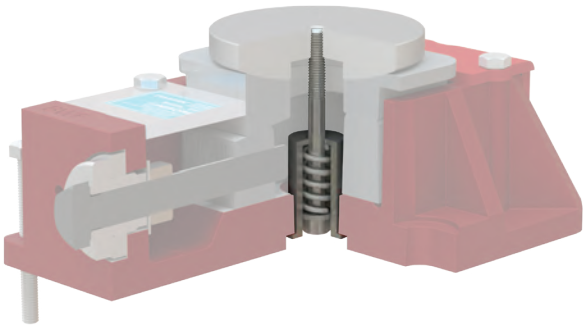

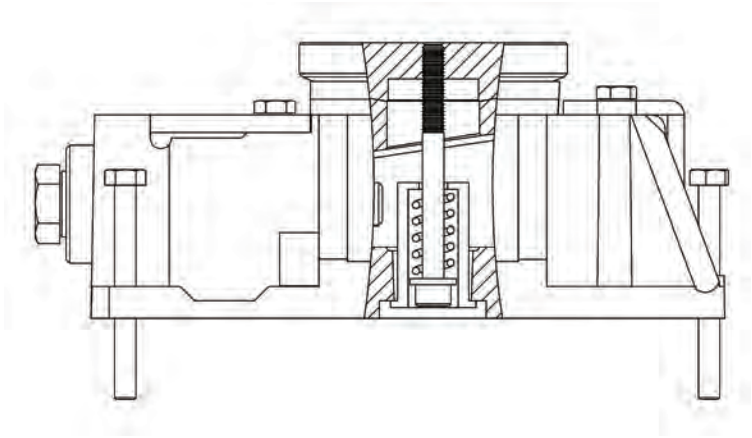

frot

Connection for mobile application.

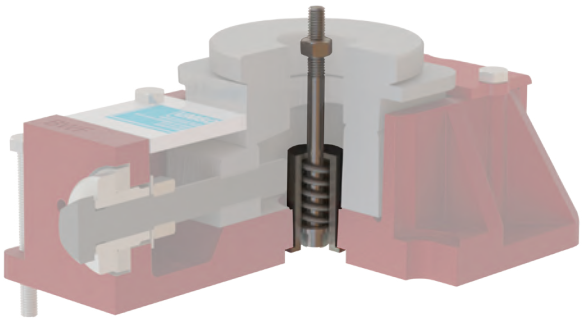

DIMENSIONS		
RK	M	I
I	M6	.31
II	M6	.31
III	M8	.31
IV	M8	.31
V	M8	.31

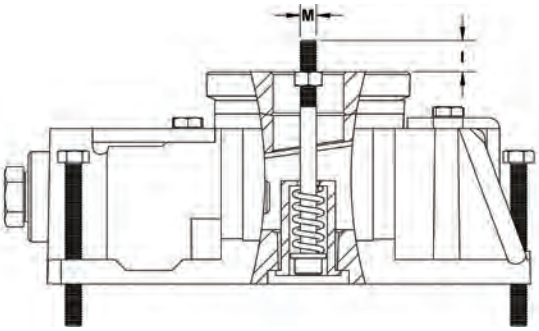

Option we/2 Bolt Specifications

Top Section Specifications

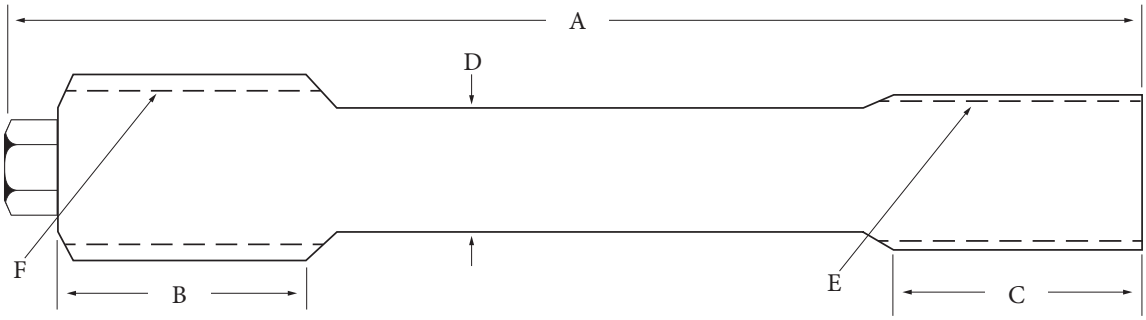

DIMENSIONS						
RK	A	B	C	D	E	F
I	130mm	43mm	—	12.7mm	M14 x 2	M16 x 2
II	6.87”	32mm	35mm	16.35mm	M18 x 2.5mm	M20 x 2.5mm
III	8.25”	42mm	40mm	19mm	M22 x 2.5mm	M24 x 3.0mm
IV	9.25”	49mm	40mm	24mm	M27 x 3.0mm	M33 x 3.5mm
V	10.00”	60mm	45mm Min.	29mm	M33 x 3.5mm	M36 x 4mm

Bottom Section Specifications

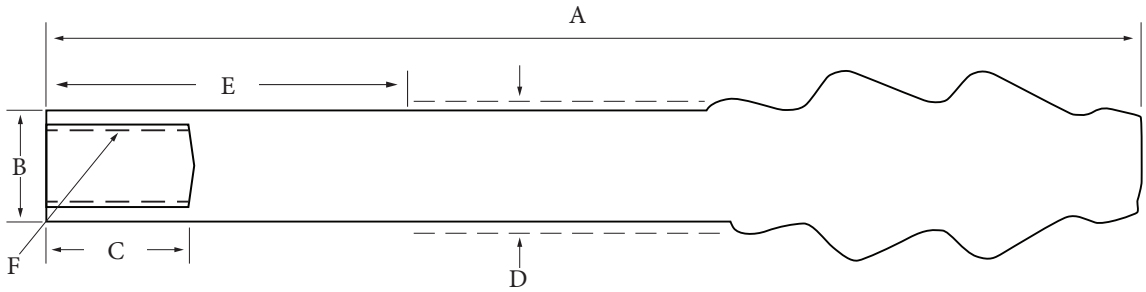

DIMENSIONS						
RK	A	B	C	D	E	F
I	190mm	18mm	32mm	20mm	55mm	M14 x 2mm
II	10.875”	24mm	35mm	—	—	M18 x 2.5mm
III	14.375”	30mm	40mm	—	—	M22 x 2.5mm
IV	17.500”	36mm	40mm	—	—	M27 x 3mm
V	23.625”	45mm	45mm	45mm	140mm	M33 x 3.5mm

Option ste/2 Bolt Specifications

Top Section Specifications

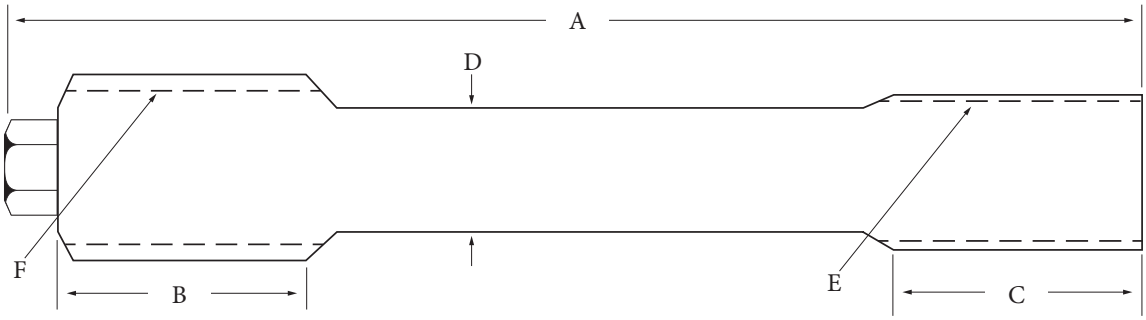

DIMENSIONS						
RK	A	B	C	D	E	F
I	130mm	43mm	—	12.7mm	M14 x 2	M16 x 2
II	6.87”	32mm	35mm	16.35mm	M18 x 2.5mm	M20 x 2.5mm
III	8.25”	42mm	40mm	19mm	M22 x 2.5mm	M24 x 3.0mm
IV	9.25”	49mm	40mm	24mm	M27 x 3.0mm	M33 x 3.5mm
V	10.00”	60mm	45mm Min.	29mm	M33 x 3.5mm	M36 x 4mm

Bottom Section Specifications

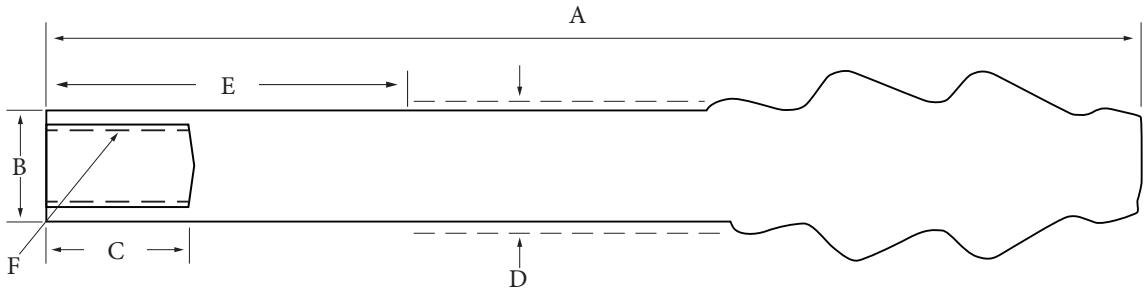

DIMENSIONS						
RK	A	B	C	D	E	F
I	190mm	18mm	32mm	20mm	55mm	M14 x 2mm
II	10.875”	24mm	35mm	—	—	M18 x 2.5mm
III	14.375”	30mm	40mm	—	—	M22 x 2.5mm
IV	17.500”	36mm	40mm	—	—	M27 x 3mm
V	23.625”	45mm	45mm	45mm	140mm	M33 x 3.5mm

RK Fixator Installation Instructions

Overview

The machine to be installed is moved to its approximate position, supported with temporary blocks, and the FIXATORS® with their options are prehung from the machine base. The machine base is then moved into final position on the foundation. The Fixator® with their anchors suspended from the base are positioned and lowered into previously prepared grout cavities. The machine is rough aligned and permanently grouted into place. When the grout has cured sufficiently, the temporary blocks are removed. The anchor bolts are tightened, and the machine is then precisely leveled and aligned with the Fixator® adjusting wedges. This approach eliminates the need for precise presetting of the mounts and results in substantial time savings.

Step-By-Step

1 **FOUNDATION PREPARATION** — Prepare the foundation in accordance with accepted civil engineering practices. Grout cavities for the Fixator® base and anchor bolts may be provided by pre-casting them or by core drilling after pouring concrete. The best core drilling results can be obtained while the foundation is green (approximately 48 hours). Anchor bolt holes shall be in accordance with Unisorb® Drawing No. 469900-02. Grout cavities for recessed Fixator® mounting shall be in accordance with Unisorb® Drawing No. 469900- 07.

2 **POSITION MACHINE** — When the concrete is cured sufficiently to support machine loads, prepare the machine for installation in accordance with the manufacturer's instructions and move into position on the foundation. The machine is supported temporarily on blocks with the anchor holes over the previously prepared grout cavities. Note: Temporary blocks should be high enough to permit assembly of Fixator® units to the machine base.

3 **ATTACH FIXATORS®** — Turn the Fixator® alignment and leveling adjustment screw fully counterclockwise to assure that the full travel of the wedge will be available during the alignment phase. Assemble the Fixator® with the anchor bolt and spherical washer set to the machine base. (Refer to the installation drawing included in this manual for proper assembly.) Position the "O" ring and set collar provided with the anchor bolt against the bottom of the Fixator®, securing it with the set screw provided. The anchor nut should be positioned so that three threads are exposed and only tightened sufficiently to hold the Fixator® unit in contact with the machine base.

4 LOWER MACHINE — Lower the machine into final position, again supported by temporary blocks with the Fixator® projected into the grout cavities. The machine should now be rough aligned to a value of plus or minus 1/16" (1.6mm). Note: Minimum clearance between the Fixator® base and the foundation for grout placement must be 1/2" (12mm) for Unisorb® Standard V-100 Epoxy Grout Formula and 1-1/2" (38mm) for Unisorb® V-1 Cementitious grout. The three small presetting screws in the Fixator® base flange may be used to level the Fixator® to the foundation, if desired. Do not attempt to support the machine weight with these three screws.

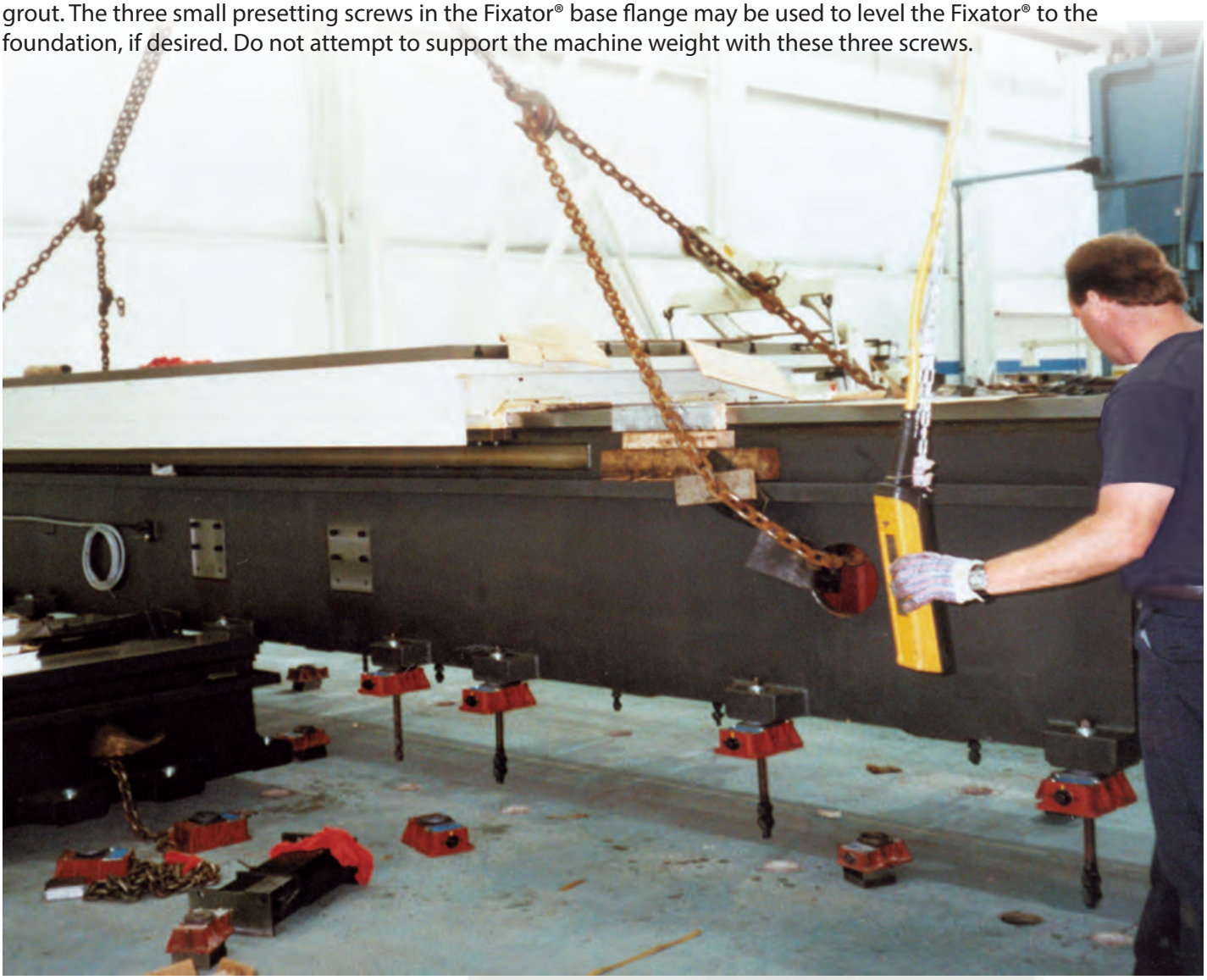

5 **PREPARE GROUT FORMS** — Apply butyl tape around the bottom flange of grout form. Leave release paper on. Clean the floor thoroughly with oil free compressed air. Remove paper from butyl tape and press form securely to the floor for about 30 seconds to create a secure seal.

6 **POUR GROUT** — Prepare and pour Unisorb® Grout in accordance with grouting instructions provided with the material. Pour grout to cover Fixator® base flange as shown on Unisorb® Drawing No. 469900-02 for surface mounting or Unisorb® Drawing No. 469900-07 for recessed mounting. Grout forms used for surface mounting may be removed after grout has set.

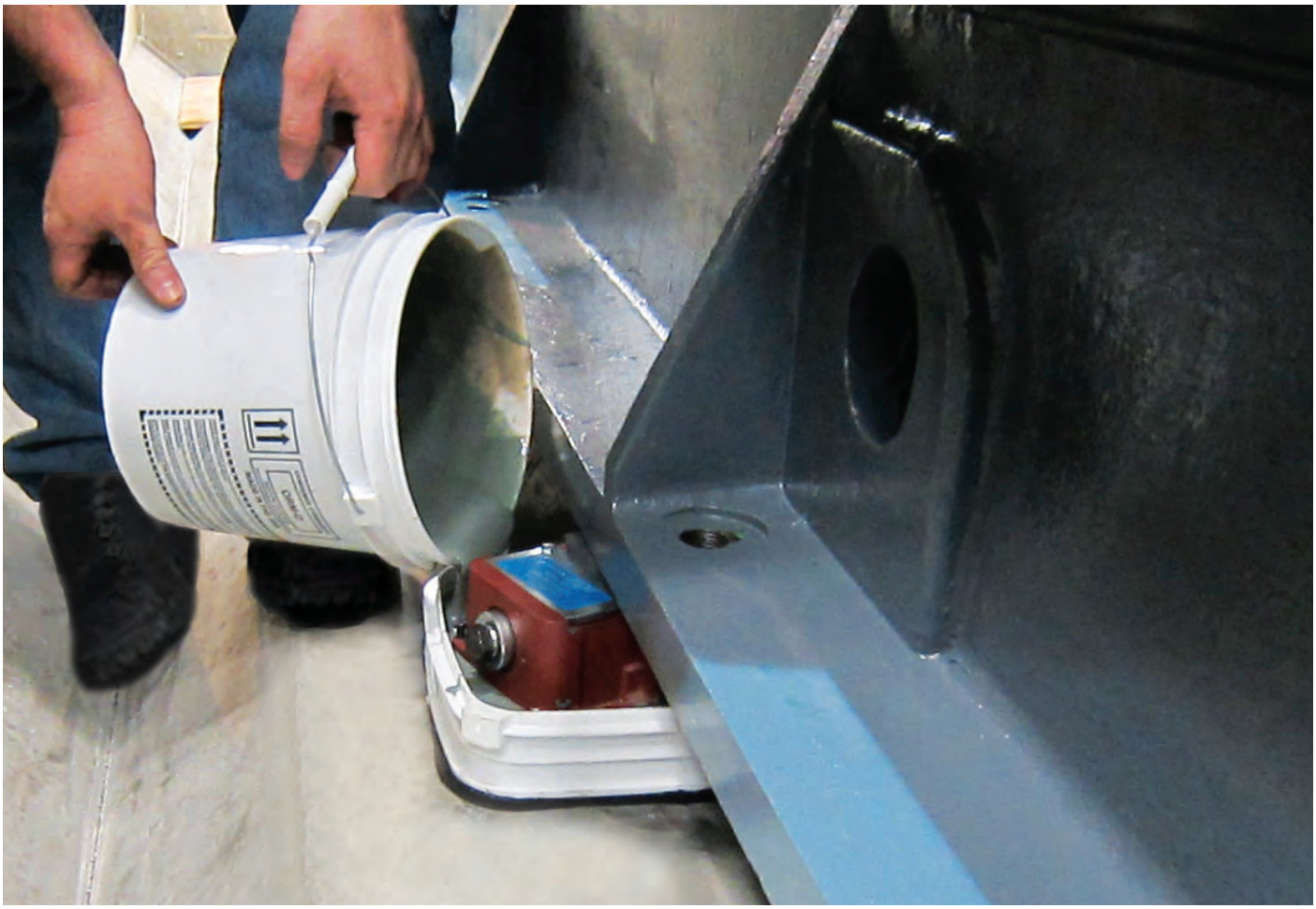

7 ADJUST FIXATORS® — After grout cures and with anchor nuts loose, remove the temporary blocks. Snug anchor nuts with a small hand wrench and turn each adjusting screw two full turns. This action applies final tension to the anchor bolts and prepares the machine and the foundation. When raising the machine, adjust all Fixators® in sequence, starting at one end or the middle and working toward each end. Do not skip any units.

8 FINAL MACHINE ALIGNMENT — Any reliable alignment measuring system may be used. We suggest however that optical or electronic systems are far superior to bubble-level technology in that they respond much faster, thus allowing installers to take full advantage of the quick installation characteristics offered by the Fixator® system. Align the machine by locating the high spot and raising the remainder of the machine to match. The anchor nuts will remain tightened during this operation. If it becomes necessary to lower an individual Fixator® during final alignment do not exceed one full turn. If more than one turn is required the unit should be backed off until the anchor nut loosens; the nut is re-snugged, and the unit is raised to the desired adjustment. This is necessary to assure that the minimum anchor bolt tension is achieved. When final level and alignment is achieved, the machine may be placed into operation. Note: The base may be realigned at any time, if required. Simply adjust the Fixator® units, again raising the low points. The anchor nuts need not be loosened to accomplish the realignment.

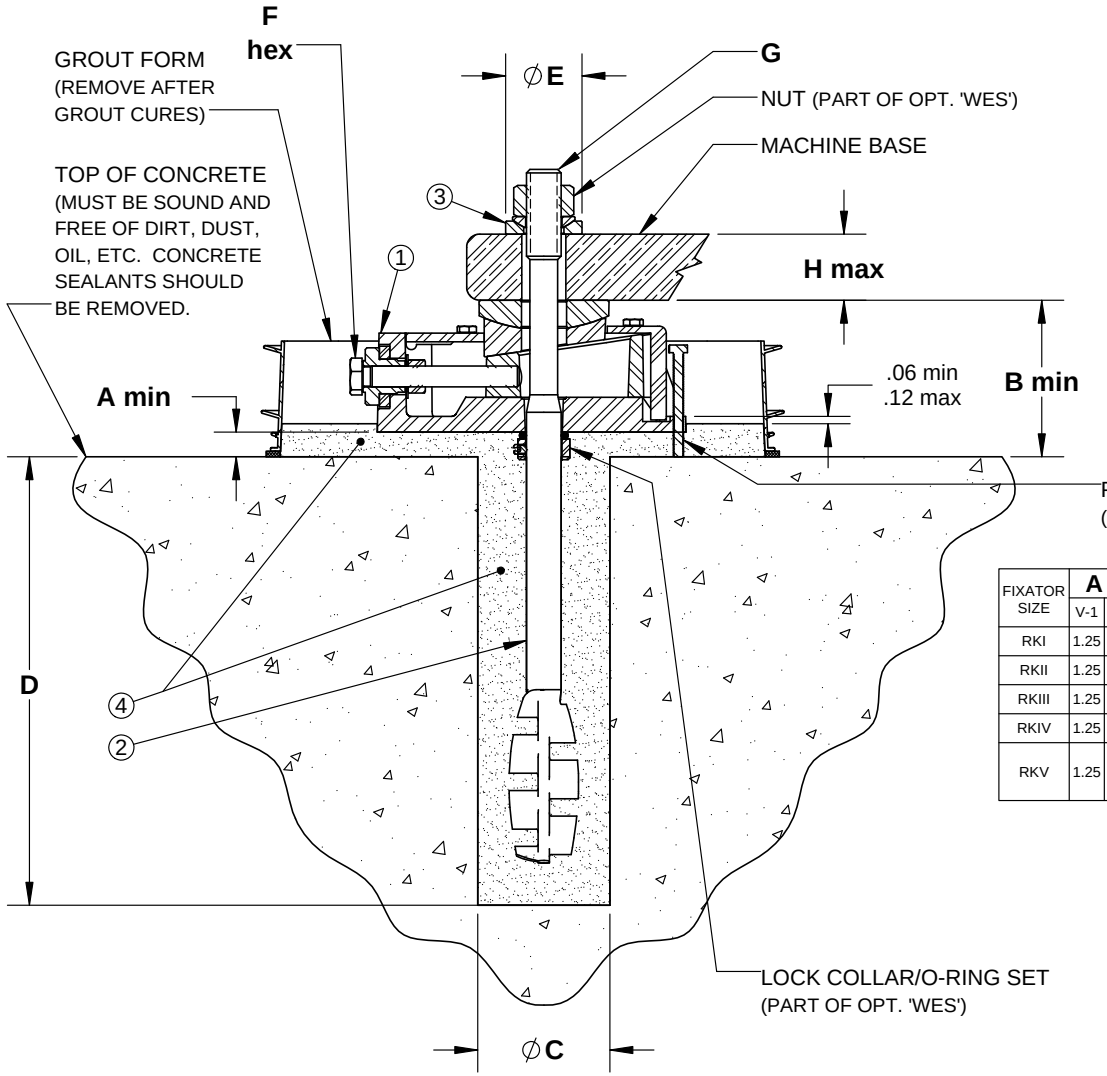

BILL OF MATERIALS

ITEM	QTY	DESCRIPTION
1	1	FIXATOR BASIC UNIT WITH OPTION 'F'
2	1	OPTION 'WES' ANCHOR/HOLD DOWN STUD
3	1	OPTION 'P' SPHERICAL WASHER SET
		OPTION 'R' OVERSIZE SPHERICAL WASHER SET
4	A/R	V-1 NON-SHRINK GROUT
		STANDARD V-100 EPOXY GROUT

FIXATOR SIZE	A MIN		B MIN		C		D		E		F hex MM/(IN.)	G	H MAX
	V-1	V-100	V-1	V-100	V-1	V-100			OPT. 'P'	OPT. 'R'			
RKI	1.25	.50	3.50	2.76	3.00	1.50	9.00		1.57	1.73	19/(.75)	16MM	2.36
RKII	1.25	.50	4.29	3.54	3.50	2.00	10.50		1.73	2.20	19/(.75)	20MM	3.54
RKIII	1.25	.50	5.08	4.33	4.00	2.50	13.50		2.20	2.68	24/(.94)	24MM	3.94
RKIV	1.25	.50	5.87	5.12	5.00	3.00	16.25		2.68	3.07	30/(1.18)	30MM	5.31
RKV	1.25	.50	6.65	5.91	36MM 6.00	36MM 3.50	36MM 22.50		36MM 3.07	36MM 3.94	36/(1.42)	36MM	5.91
					42MM 7.00	42MM 4.00	42MM 30.00		42MM 3.94	42MM 4.92		42MM	7.87

REV.	DESCRIPTION	BY	DATE	CHK'D	DATE
C	REVISED B DIMENSIONS	WLL	4/30/2019	DLS	4/30/2019

-	PRELIMINARY DRAWING
-	FINAL DRAWING
X	CONCEPTUAL

PROPRIETARY AND CONFIDENTIAL
PROPERTY OF UNISORB INSTALLATION TECHNOLOGIES. REPRODUCTION OF THIS DRAWING FOR PURPOSES OTHER THAN INSTALLATION OR MAINTENANCE REQUIRES THE EXPRESS PERMISSION OF UNISORB INSTALLATION TECHNOLOGIES. THIS DRAWING IS NOT TO BE REPRODUCED, USED FOR FABRICATION OR DISCLOSED TO THIRD PARTIES WITHOUT PRIOR WRITTEN CONSENT FROM UNISORB INSTALLATION TECHNOLOGIES.

DO NOT SCALE DRAWING

SCALE: NONE

UNISORB® INSTALLATION TECHNOLOGIES
BOX 1000, JACKSON, MI 49204-1000
517-764-6060 FAX: 517-764-5607
www.unisorb.com

TITLE: STANDARD INSTALLATION DRAWING

CUSTOMER / PROJECT: -

MACHINE: RK FIXATOR WITH OPTION 'WES'

MATERIAL: -

DRWN BY: WLL DATE: 2-23-18

CHK'D BY: DLS DATE: 2-23-18

DWG. NO. **469900-02**

SHT 1 / 1

REV **C**

DOCUMENT IS ELECTRONICALLY CONTROLLED. VERIFY REV PRIOR TO USE.

BILL OF MATERIALS

ITEM	QTY	DESCRIPTION
1	1	FIXATOR BASIC UNIT WITH OPTION 'F'
2	1	OPTION 'B' MACHINE BASE
3	1	OPTION 'STE' HOLD DOWN STUD
4	1	OPTION 'P' SPHERICAL WASHER SET
		OPTION 'R' OVERSIZE SPHERICAL WASHER SET
5	A/R	STANDARD V-100 EPOXY GROUT
6	1	STEEL PLATE, (SEE '**G**' & '**H**' DIM'S). SUPPLIED BY UNISORB OR CUSTOMER
7	3	OPTIONAL LEVELING BOLT, VARIABLE SIZE, SUPPLIED BY UNISORB OR CUSTOMER

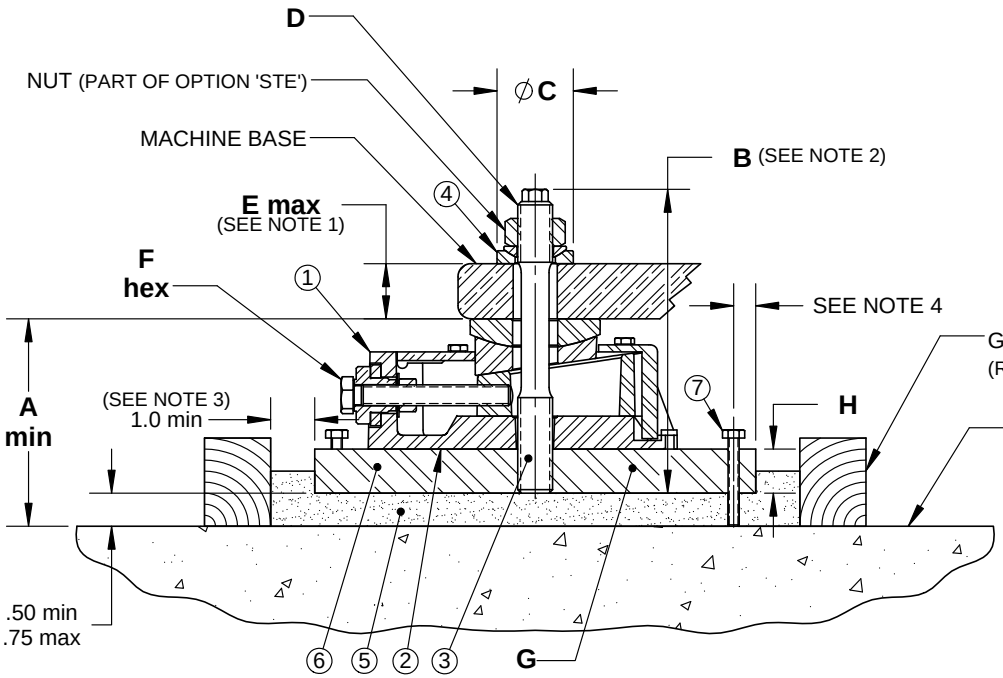

GROUT FORM BY CUSTOMER
(REMOVE AFTER GROUT CURES)

TOP OF CONCRETE MUST BE SOUND AND FREE OF DIRT, DUST, OIL, ETC. CONCRETE SEALANTS SHOULD BE REMOVED.

FIXATOR SIZE	A MIN	B	C OPT. 'P'	C OPT. 'R'	D	E MAX	F hex MM/(IN.)	G PLATE SIZE	H
RKI	3.68	6.69	1.73	2.20	16MM	2.36	19/(.75)	6 x 9	1.00
RKII	4.46	6.89	1.73	2.20	20MM	1.18	19/(.75)	7 x 10	1.00
RKIII	5.25	8.46	2.20	2.68	24MM	1.77	24/(.94)	8 x 12	1.00
RKIV	6.29	10.24	2.68	3.07	30MM	2.09	30/(1.18)	10 x 15	1.25
RKV	7.33	12.40	3.07	3.94	36MM	2.64	36/(1.42)	15 x 20	1.50

NOTES:

1. DIM SHOWN IS FOR STANDARD LENGTH OPT. 'STE'. LONGER STUDS ARE AVAILABLE FOR SPECIAL APPLICATIONS WHERE MACHINE FOOT THICKNESS DICTATES.
2. DIM SHOWN IS WHEN USING STANDARD LENGTH OPT. 'STE'.
3. 1" MIN. OUTSIDE OF STEEL PLATE ON 3 SIDES, AND 3" MIN. OUTSIDE OF STEEL PLATE ON GROUT POUR SIDE.
4. SEE UNISORB DRAWING 469900-03A FOR DIMENSIONAL LAYOUT OF STEEL PLATES.

REV.	DESCRIPTION	BY	DATE	CHK'D	DATE
B	REVISED 'E' AND 'A' DIMS	WLL	4/30/2019	DLS	4/30/2019

-	PRELIMINARY DRAWING
-	FINAL DRAWING
X	CONCEPTUAL

PROPRIETARY AND CONFIDENTIAL
PROPERTY OF UNISORB INSTALLATION TECHNOLOGIES. REPRODUCTION OF THIS DRAWING FOR PURPOSES OTHER THAN INSTALLATION OR MAINTENANCE REQUIRES THE EXPRESS PERMISSION OF UNISORB INSTALLATION TECHNOLOGIES. THIS DRAWING IS NOT TO BE REPRODUCED, USED FOR FABRICATION OR DISCLOSED TO THIRD PARTIES WITHOUT PRIOR WRITTEN CONSENT FROM UNISORB INSTALLATION TECHNOLOGIES.

DO NOT SCALE DRAWING
SCALE: NONE

UNISORB®
INSTALLATION TECHNOLOGIES
BOX 1000, JACKSON, MI 49204-1000
517-764-6060 FAX: 517-764-5607
www.unisorb.com

TITLE: STANDARD INSTALLATION DRAWING
CUSTOMER / PROJECT: -
MACHINE: RK FIXATOR WITH OPTION 'STE' ON STEEL PLATE
MATERIAL: -
DRWN BY: WLL DATE: 2-27-18
CHK'D BY: DLS DATE: 2-27-18
DWG. NO. **469900-03**
SHT 1 / 1
REV **B**

DOCUMENT IS ELECTRONICALLY CONTROLLED. VERIFY REV PRIOR TO USE.

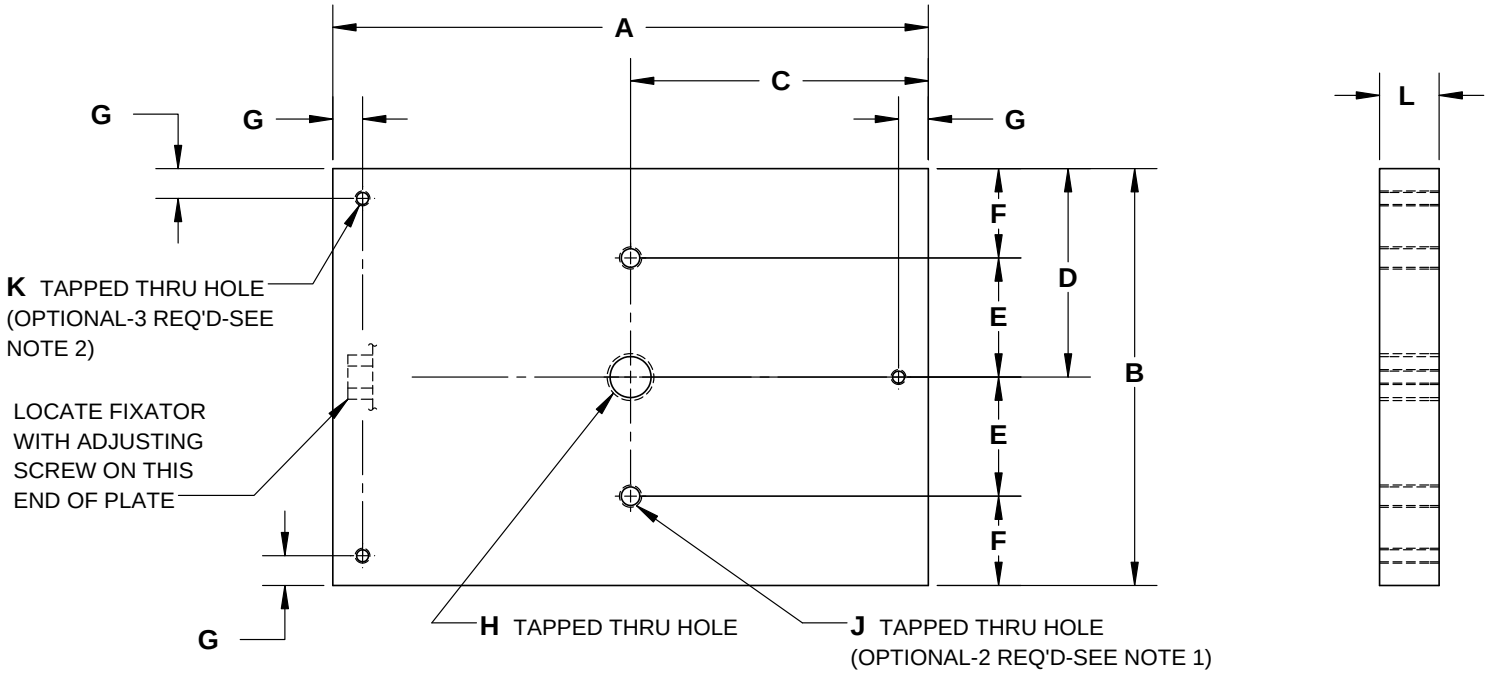

FIXATOR SIZE	A	B	C	D	E	F	G	H	J	K	L
RK I	9.00	6.00	4.50	3.00	1.81	1.19	.50	16MM	3/8-16	1/4-20	1.00
RK II	10.00	7.00	5.00	3.50	2.00	1.50	.50	20MM	3/8-16	1/4-20	1.00
RK III	12.00	8.00	6.00	4.00	2.62	1.38	.50	24MM	1/2-13	1/4-20	1.00
RK IV	15.00	10.00	7.50	5.00	3.18	1.82	.50	30MM	3/4-10	1/4-20	1.25
RK V	20.00	15.00	10.00	7.50	4.04	3.47	.75	36MM	1-8	3/8-16	1.50

BOLTS FOR TAPPED HOLES		
FIXATOR SIZE	J (2) HOLES	K (2) HOLES
RK I	3/8-16 x 1.50 HEX HEAD WITH FLAT WASHER	1/4-20 x 2.00 HEX HEAD
RK II	3/8-16 x 1.50 HEX HEAD WITH FLAT WASHER	1/4-20 x 2.00 HEX HEAD
RK III	1/2-13 x 1.75 HEX HEAD WITH FLAT WASHER	1/4-20 x 2.00 HEX HEAD
RK IV	3/4-10 x 2.25 HEX HEAD WITH FLAT WASHER	1/4-20 x 2.25 HEX HEAD
RK V	1-8 x 2.25 HEX HEAD WITH FLAT WASHER	3/8-16 x 2.50 HEX HEAD

REV.	DESCRIPTION	BY	DATE	CHK'D	DATE
A	DRAWING CONVERTED TO SW, OTHER VERSIONS OBSOLETE	WLL	2-28-18	DLS	2-28-18

NOTES:

1. TAPPED HOLES **J** WILL ONLY BE REQ'D WHEN OPTION 'D' LATERAL STABILIZER IS USED.
2. TAPPED HOLES **K** WILL ONLY BE REQ'D IF CUSTOMER IS GOING TO USE PRE-LEVELING BOLTS.
3. FOR FIXATOR INSTALLATION DRAWING, UTILIZING STEEL PLATES, SEE UNISORB DRAWING 469900-03.

-	PRELIMINARY DRAWING
-	FINAL DRAWING
X	CONCEPTUAL

PROPRIETARY AND CONFIDENTIAL
PROPERTY OF UNISORB INSTALLATION TECHNOLOGIES. REPRODUCTION OF THIS DRAWING FOR PURPOSES OTHER THAN INSTALLATION OR MAINTENANCE REQUIRES THE EXPRESS PERMISSION OF UNISORB INSTALLATION TECHNOLOGIES. THIS DRAWING IS NOT TO BE REPRODUCED, USED FOR FABRICATION OR DISCLOSED TO THIRD PARTIES WITHOUT PRIOR WRITTEN CONSENT FROM UNISORB INSTALLATION TECHNOLOGIES.

DO NOT SCALE DRAWING
SCALE: NONE

UNISORB® INSTALLATION TECHNOLOGIES
BOX 1000, JACKSON, MI 49204-1000
517-764-6060 FAX: 517-764-5607
www.unisorb.com

TITLE: DIMENSIONAL LAYOUT
CUSTOMER / PROJECT: -
MACHINE: STEEL PLATE FOR FIXATOR WITH OPTION 'STE'
MATERIAL: -
DRWN BY: WLL DATE: 2-28-18
CHK'D BY: DLS DATE: 2-28-18
DWG. NO. **469900-03A**
SHT 1/1
REV **A**

DOCUMENT IS ELECTRONICALLY CONTROLLED. VERIFY REV PRIOR TO USE.

BILL OF MATERIALS

ITEM	QTY	DESCRIPTION
1	1	FIXATOR BASIC UNIT
2	1	OPTION 'STE' HOLD DOWN STUD
3	1	OPTION 'P' SPHERICAL WASHER SET
		OPTION 'R' OVERSIZE SPHERICAL WASHER SET
4	A/R	STANDARD V-100 EPOXY GROUT

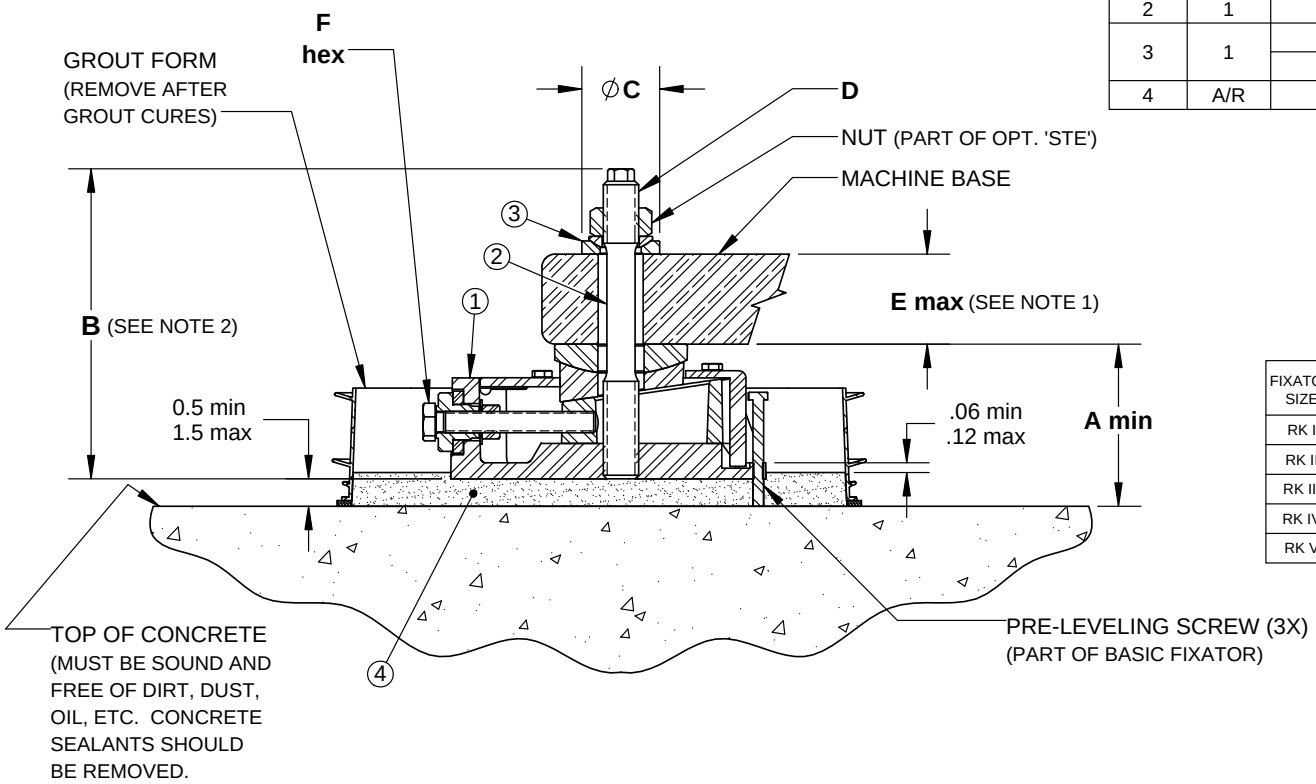

FIXATOR SIZE	A MIN	B	C OPT. 'P'	C OPT. 'R'	D	E MAX	F HEX MM/(IN)
RK I	--------	--------	--------	--------	--------	--------	--------
RK II	3.54	6.89	1.73	2.20	20MM	2.17	19/(.75)
RK III	4.33	8.46	2.20	2.68	24MM	2.76	24/(.94)
RK IV	5.12	10.24	2.68	3.07	30MM	3.35	30/(1.18)
RK V	5.91	12.40	3.07	3.94	36MM	4.13	36/(1.42)

REV.	DESCRIPTION	BY	DATE	CHK'D	DATE
B	REVISED DIMENSION A	WLL	4/30/2019	DLS	4/30/2019

NOTES:

1. DIMENSION SHOWN IS FOR STANDARD LENGTH OPTION 'STE'. LONGER STUDS ARE AVAILABLE FOR SPECIAL APPLICATIONS WHERE MACHINE FOOT THICKNESS DICTATES.
2. DIMENSION SHOWN IS WHEN USING STANDARD LENGTH OPTION 'STE'.

-	PRELIMINARY DRAWING
-	FINAL DRAWING
X	CONCEPTUAL

PROPRIETARY AND CONFIDENTIAL
PROPERTY OF UNISORB INSTALLATION TECHNOLOGIES. REPRODUCTION OF THIS DRAWING FOR PURPOSES OTHER THAN INSTALLATION OR MAINTENANCE REQUIRES THE EXPRESS PERMISSION OF UNISORB INSTALLATION TECHNOLOGIES. THIS DRAWING IS NOT TO BE REPRODUCED, USED FOR FABRICATION OR DISCLOSED TO THIRD PARTIES WITHOUT PRIOR WRITTEN CONSENT FROM UNISORB INSTALLATION TECHNOLOGIES.

DO NOT SCALE DRAWING

SCALE: NONE

UNISORB® INSTALLATION TECHNOLOGIES
BOX 1000, JACKSON, MI 49204-1000
517-764-6060 FAX: 517-764-5607
www.unisorb.com

TITLE: STANDARD INSTALLATION DRAWING

CUSTOMER / PROJECT: -

MACHINE: RK FIXATOR WITH OPTION 'STE'

MATERIAL: -

DRWN BY: WLL DATE: 3-1-18

CHK'D BY: DLS DATE: 3-1-18

DWG. NO. **469900-04**

SHT 1 / 1

REV **B**

DOCUMENT IS ELECTRONICALLY CONTROLLED. VERIFY REV PRIOR TO USE.

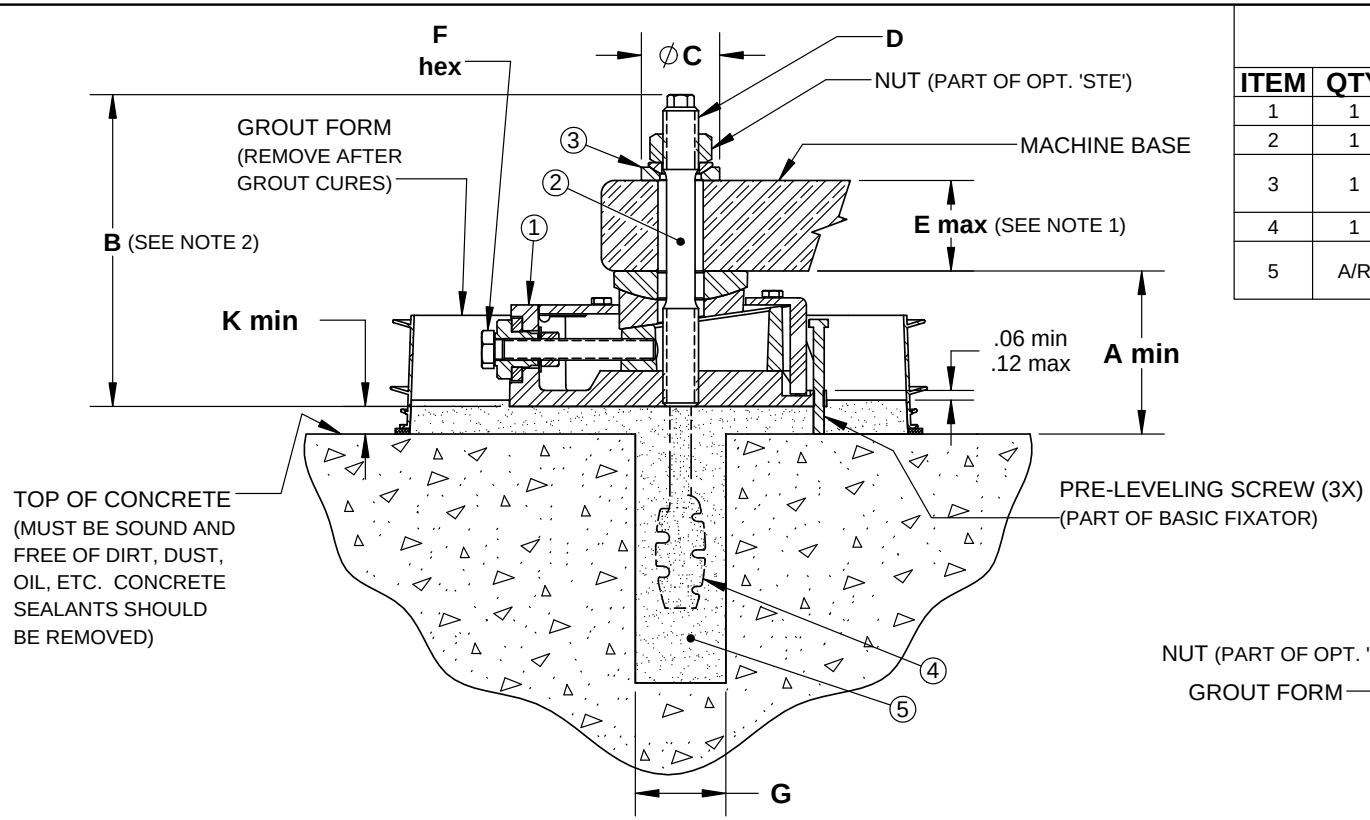

BILL OF MATERIALS

ITEM	QTY	DESCRIPTION
1	1	FIXATOR BASIC UNIT
2	1	OPTION 'STE' HOLD DOWN STUD
3	1	OPTION 'P' SPHERICAL WASHER SET
		OPTION 'R' OVERSIZE SPHERICAL WASHER SET
4	1	OPTION 'C' SIDE ANCHOR (2 BOLTS PER UNIT)
5	A/R	V-1 NON-SHRINK GROUT
		STANDARD V-100 EPOXY GROUT

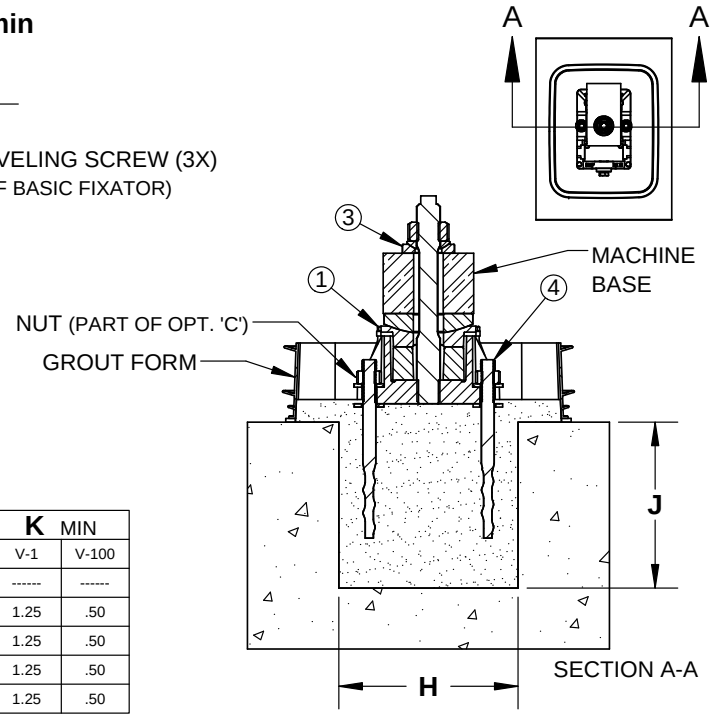

FIXATOR SIZE	A MIN		B	C		D	E MAX	F HEX MM/(IN)	G		H		J	K MIN	
	V-1	V-100		OPT. 'P'	OPT. 'R'				V-1	V-100	V-1	V-100		V-1	V-100
RK I	------	------	------	------	------	------	------	------	------	------	------	------	------	------	------
RK II	4.29	3.54	6.89	1.73	2.20	20MM	2.17	19/(.75)	2.50	1.75	6.25	5.50	5.50	1.25	.50
RK III	5.08	4.33	8.46	2.20	2.68	24MM	2.76	24/(.94)	2.75	2.00	8.00	7.25	9.50	1.25	.50
RK IV	5.87	5.12	10.24	2.68	3.07	30MM	3.35	30/(1.18)	3.25	2.50	9.50	9.00	11.50	1.25	.50
RK V	6.65	5.91	12.40	3.07	3.94	36MM	4.13	36/(1.42)	4.00	3.50	12.00	10.50	13.75	1.25	.50

REV.	DESCRIPTION	BY	DATE	CHK'D	DATE
B	REVISED DIMENSION A	WLL	5-2-19	DLS	5-2-19

NOTES:

1. DIMENSION SHOWN IS FOR STANDARD LENGTH OPTION 'STE'. LONGER STUDS ARE AVAILABLE FOR SPECIAL APPLICATIONS WHERE MACHINE FOOT THICKNESS DICTATES.
2. DIMENSION SHOWN IS WHEN USING STANDARD LENGTH OPTION 'STE'.

-	PRELIMINARY DRAWING
-	FINAL DRAWING
X	CONCEPTUAL

PROPRIETARY AND CONFIDENTIAL
PROPERTY OF UNISORB INSTALLATION TECHNOLOGIES. REPRODUCTION OF THIS DRAWING FOR PURPOSES OTHER THAN INSTALLATION OR MAINTENANCE REQUIRES THE EXPRESS PERMISSION OF UNISORB INSTALLATION TECHNOLOGIES. THIS DRAWING IS NOT TO BE REPRODUCED, USED FOR FABRICATION OR DISCLOSED TO THIRD PARTIES WITHOUT PRIOR WRITTEN CONSENT FROM UNISORB INSTALLATION TECHNOLOGIES.

DO NOT SCALE DRAWING

SCALE: NONE

UNISORB® INSTALLATION TECHNOLOGIES
BOX 1000, JACKSON, MI 49204-1000
517-764-6060 FAX: 517-764-5607
www.unisorb.com

TITLE: STANDARD INSTALLATION DRAWING
CUSTOMER / PROJECT: -
MACHINE: RK FIXATOR WITH OPTION 'STE' & 'C'
MATERIAL: -
DRWN BY: WLL DATE: 3-2-18
CHK'D BY: DLS DATE: 3-2-18
DWG. NO. **469900-05**
SHT 1/1
REV **B**

DOCUMENT IS ELECTRONICALLY CONTROLLED. VERIFY REV PRIOR TO USE.

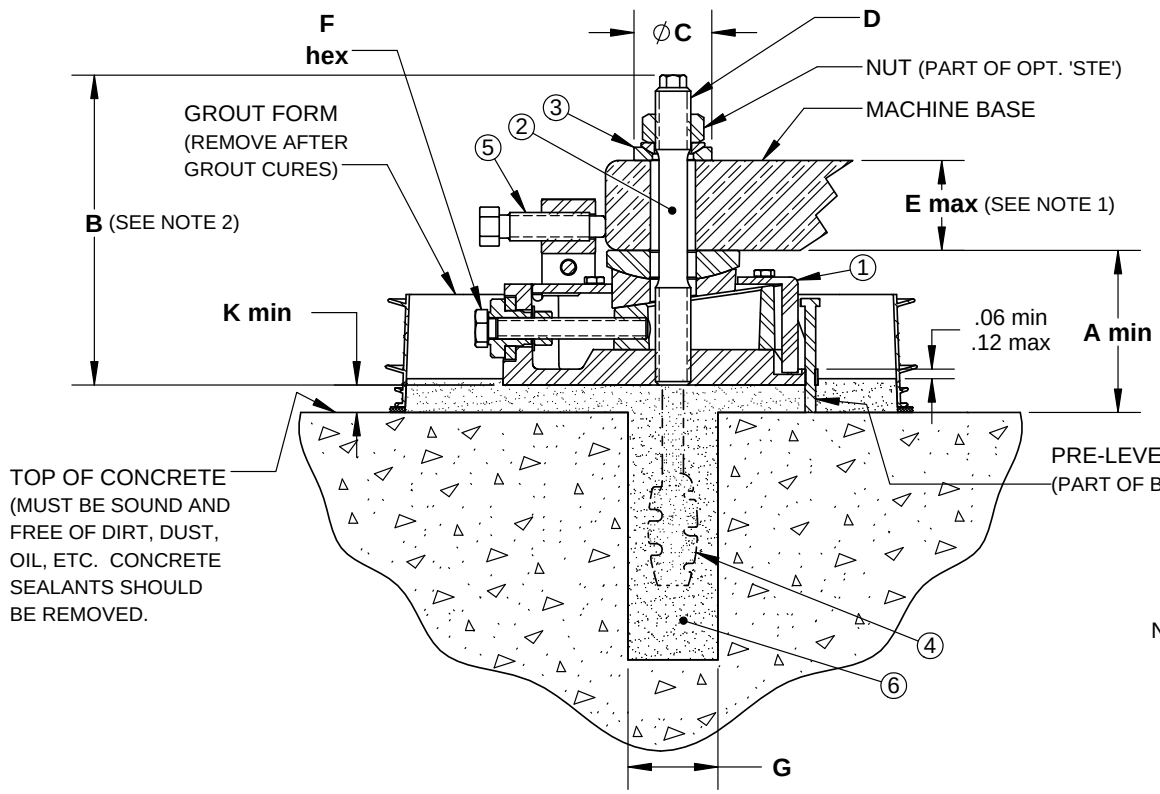

BILL OF MATERIALS

ITEM	QTY	DESCRIPTION
1	1	FIXATOR BASIC UNIT
2	1	OPTION 'STE' HOLD DOWN STUD
3	1	OPTION 'P' SPHERICAL WASHER SET
		OPTION 'R' OVERSIZE SPHERICAL WASHER SET
4	1	OPTION 'C' SIDE ANCHOR (2 BOLTS PER UNIT)
5	1	OPTION 'D' LATERAL STABILIZER
6	A/R	V-1 NON-SHRINK GROUT
		STANDARD V-100 EPOXY GROUT

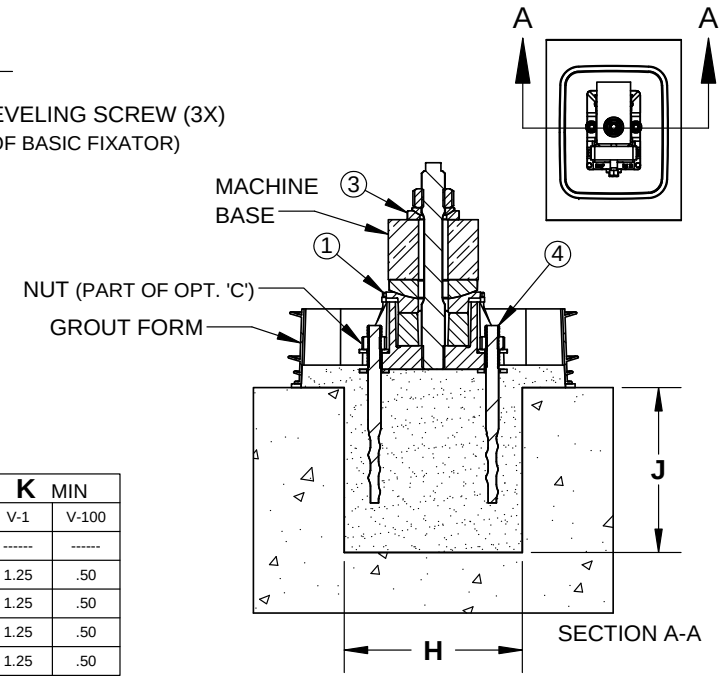

FIXATOR SIZE	A MIN		B	C		D	E MAX	F HEX MM/(IN)	G		H		J	K MIN	
	V-1	V-100		OPT. 'P'	OPT. 'R'				V-1	V-100	V-1	V-100		V-1	V-100
RK I	------	------	------	------	------	------	------	------	------	------	------	------	------	------	------
RK II	4.29	3.54	6.89	1.73	2.20	20MM	2.17	19/(.75)	2.50	1.75	6.25	5.50	5.50	1.25	.50
RK III	5.08	4.33	8.46	2.20	2.68	24MM	2.76	24/(.94)	2.75	2.00	8.00	7.25	9.50	1.25	.50
RK IV	5.87	5.12	10.24	2.68	3.07	30MM	3.35	30/(1.18)	3.25	2.50	9.50	9.00	11.50	1.25	.50
RK V	6.65	5.91	12.40	3.07	3.94	36MM	4.13	36/(1.42)	4.00	3.50	12.00	10.50	13.75	1.25	.50

REV.	DESCRIPTION	BY	DATE	CHK'D	DATE
B	REVISED DIMENSION A	WLL	5-2-19	DLS	5-2-19

NOTES:

1. DIMENSION SHOWN IS FOR STANDARD LENGTH OPTION 'STE'. LONGER STUDS ARE AVAILABLE FOR SPECIAL APPLICATIONS WHERE MACHINE FOOT THICKNESS DICTATES.
2. DIMENSION SHOWN IS WHEN USING STANDARD LENGTH OPTION 'STE'.

-	PRELIMINARY DRAWING
-	FINAL DRAWING
X	CONCEPTUAL

PROPRIETARY AND CONFIDENTIAL
PROPERTY OF UNISORB INSTALLATION TECHNOLOGIES. REPRODUCTION OF THIS DRAWING FOR PURPOSES OTHER THAN INSTALLATION OR MAINTENANCE REQUIRES THE EXPRESS PERMISSION OF UNISORB INSTALLATION TECHNOLOGIES. THIS DRAWING IS NOT TO BE REPRODUCED, USED FOR FABRICATION OR DISCLOSED TO THIRD PARTIES WITHOUT PRIOR WRITTEN CONSENT FROM UNISORB INSTALLATION TECHNOLOGIES.

DO NOT SCALE DRAWING

SCALE: NONE

UNISORB® INSTALLATION TECHNOLOGIES
BOX 1000, JACKSON, MI 49204-1000
517-764-6060 FAX: 517-764-5607
www.unisorb.com

TITLE: STANDARD INSTALLATION DRAWING

CUSTOMER / PROJECT: -

MACHINE: RK FIXATOR WITH OPTION 'STE', 'C', & 'D'

MATERIAL: -

DRWN BY: WLL DATE: 3-6-18

CHK'D BY: DLS DATE: 3-6-18

DWG. NO. **469900-06**

SHT 1 / 1

REV **B**

DOCUMENT IS ELECTRONICALLY CONTROLLED. VERIFY REV PRIOR TO USE.

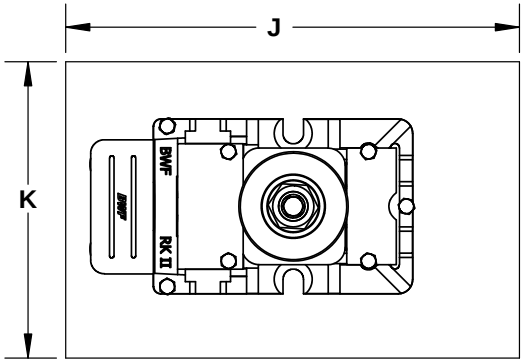

POCKET SIZE
TOP VIEW

BILL OF MATERIALS

ITEM	QTY	DESCRIPTION
1	1	FIXATOR BASIC UNIT WITH OPTION 'F'
2	1	OPTION 'WES' ANCHOR/HOLD DOWN STUD
3	1	OPTION 'P' SPHERICAL WASHER SET
		OPTION 'R' OVERSIZE SPHERICAL WASHER SET
4	A/R	V-1 NON-SHRINK GROUT
		STANDARD V-100 EPOXY GROUT
5	1	OPTION 'M' ADJUSTMENT BOLT ENCLOSURE

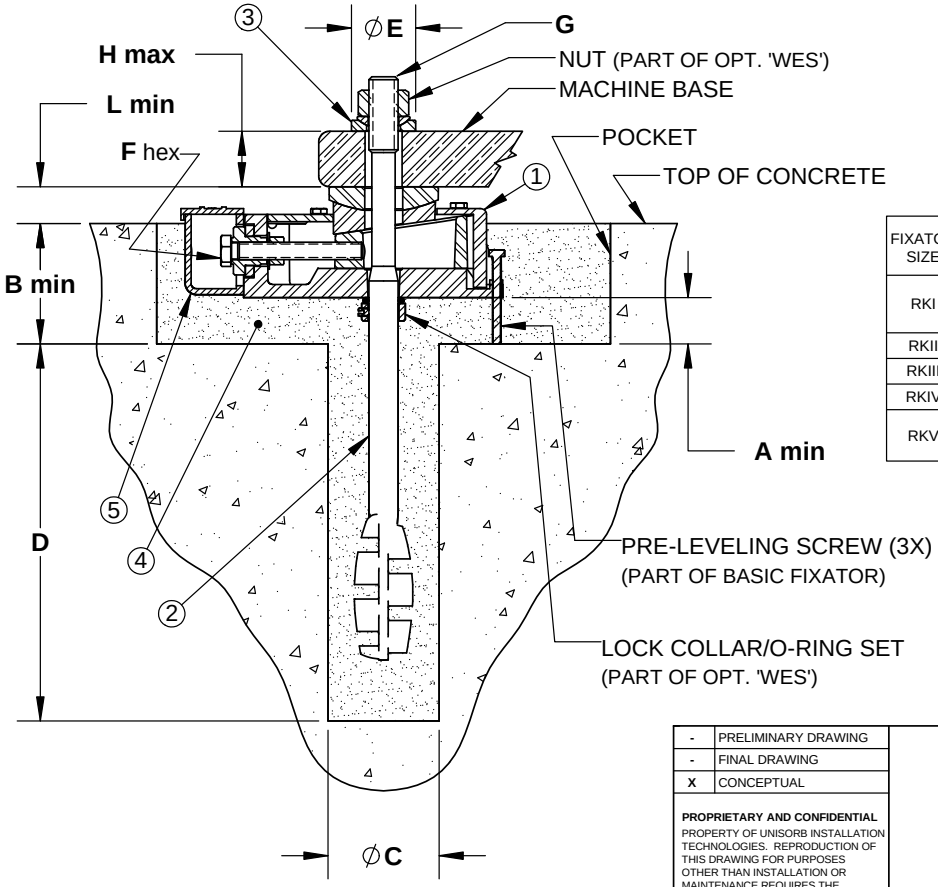

FIXATOR SIZE	A MIN		B MIN		C										D	E		F hex MM/(IN.)	G	H MAX	J	K	L MIN
	V-1	V-100	V-1	V-100	V-1		V-100									OPT. 'P'	OPT. 'R'						
RKI	1.25	.50	2.75	2.00	3.00		1.50				9.50		1.57	1.73	19/(.75)	16MM	2.36	12.25	6.50	.79			
RKII	1.25	.50	3.38	2.63	3.50		2.00				10.75		1.73	2.20	19/(.75)	20MM	3.54	12.25	8.00	.98			
RKIII	1.25	.50	3.88	3.13	4.00		2.50				13.50		2.20	2.68	24/(.94)	24MM	3.94	13.75	10.00	1.18			
RKIV	1.25	.50	4.50	3.75	5.00		3.00				16.25		2.68	3.07	30/(1.18)	30MM	5.31	17.75	12.00	1.38			
RKV	1.25	.50	5.13	4.38	36MM	6.00	36MM	3.50	36MM	22.50	36MM	3.07	36MM	3.94	36/(1.42)	36MM	5.91	20.50	13.00	1.57			
					42MM	7.00	42MM	4.00	42MM	30.00	42MM	3.94	42MM	4.92		42MM	7.87						

REV.	DESCRIPTION	BY	DATE	CHK'D	DATE
B	REVISED DIMENSION B	WLL	5/2/2019	DLS	5/2/2019

-	PRELIMINARY DRAWING
-	FINAL DRAWING
X	CONCEPTUAL

PROPRIETARY AND CONFIDENTIAL
PROPERTY OF UNISORB INSTALLATION TECHNOLOGIES. REPRODUCTION OF THIS DRAWING FOR PURPOSES OTHER THAN INSTALLATION OR MAINTENANCE REQUIRES THE EXPRESS PERMISSION OF UNISORB INSTALLATION TECHNOLOGIES. THIS DRAWING IS NOT TO BE REPRODUCED, USED FOR FABRICATION OR DISCLOSED TO THIRD PARTIES WITHOUT PRIOR WRITTEN CONSENT FROM UNISORB INSTALLATION TECHNOLOGIES.

DO NOT SCALE DRAWING
SCALE: NONE

UNISORB® INSTALLATION TECHNOLOGIES
BOX 1000, JACKSON, MI 49204-1000
517-764-6060 FAX: 517-764-5607
www.unisorb.com

TITLE: STANDARD INSTALLATION DRAWING
CUSTOMER / PROJECT: -
MACHINE: FIXATOR WITH OPTIONS 'WES' & 'M'
MATERIAL: -
DRWN BY: WLL DATE: 3-7-18
CHK'D BY: DLS DATE: 3-7-18
DWG. NO. **469900-07**
SHT 1/1
REV **B**

DOCUMENT IS ELECTRONICALLY CONTROLLED. VERIFY REV PRIOR TO USE.

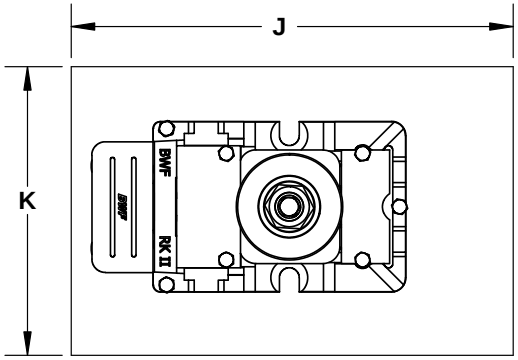

POCKET SIZE
TOP VIEW

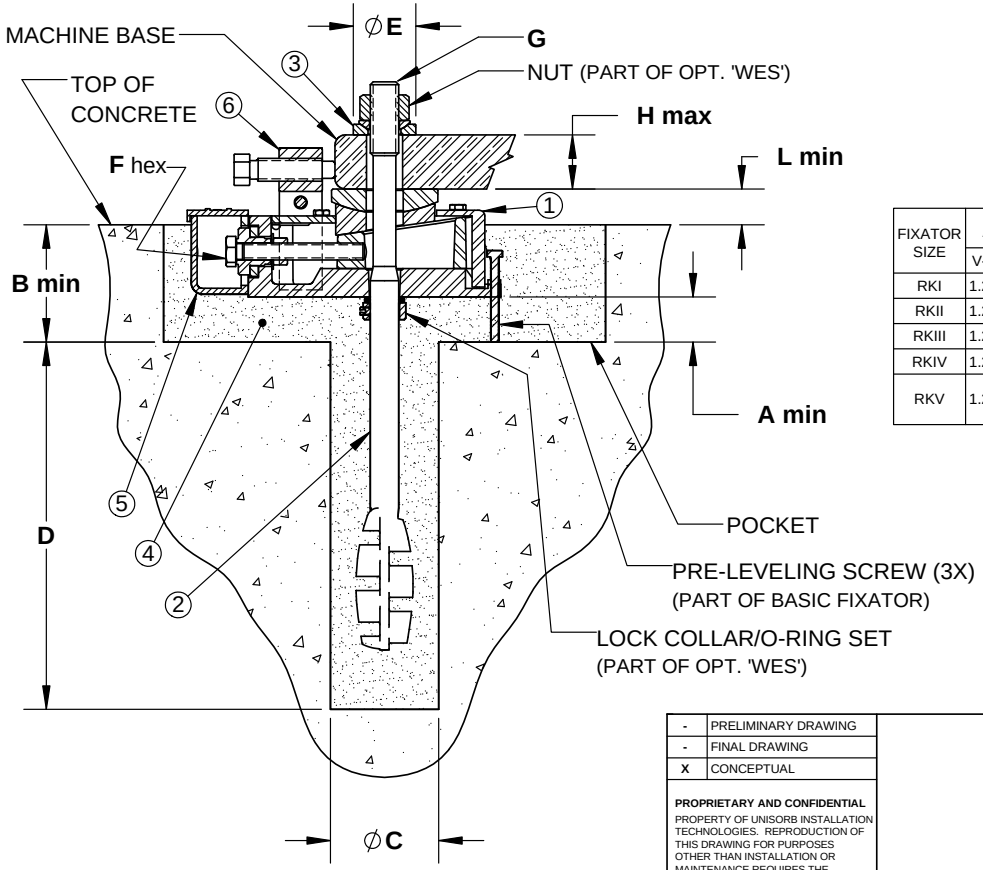

BILL OF MATERIALS

ITEM	QTY	DESCRIPTION
1	1	FIXATOR BASIC UNIT WITH OPTION 'F'
2	1	OPTION 'WES' ANCHOR/HOLD DOWN STUD
3	1	OPTION 'P' SPHERICAL WASHER SET
		OPTION 'R' OVERSIZE SPHERICAL WASHER SET
4	A/R	V-1 NON-SHRINK GROUT
		STANDARD V-100 EPOXY GROUT
5	1	OPTION 'M' ADJUSTMENT BOLT ENCLOSURE
6	1	OPTION 'D' LATERAL STABILIZER

FIXATOR SIZE	A MIN		B MIN		C		D	E		F hex MM/(IN.)	G	H MAX	J	K	L MIN
	V-1	V-100	V-1	V-100	V-1	V-100		OPT. 'P'	OPT. 'R'						
RKI	1.25	.50	2.75	2.00	3.00	1.50	9.50	1.57	1.73	19/(.75)	16MM	2.36	12.25	6.50	.79
RKII	1.25	.50	3.38	2.63	3.50	2.00	10.75	1.73	2.20	19/(.75)	20MM	3.54	12.25	8.00	.98
RKIII	1.25	.50	3.88	3.13	4.00	2.50	13.50	2.20	2.68	24/(.94)	24MM	3.94	13.75	10.00	1.18
RKIV	1.25	.50	4.50	3.75	5.00	3.00	16.25	2.68	3.07	30/(1.18)	30MM	5.31	17.75	12.00	1.38
RKV	1.25	.50	5.13	4.38	36MM 6.00	36MM 3.50	36MM 22.50	36MM 3.07	36MM 3.94	36/(1.42)	36MM	5.91	20.50	13.00	1.57
					42MM 7.00	42MM 4.00	42MM 30.00	42MM 3.94	42MM 4.92		42MM	7.87			

REV.	DESCRIPTION	BY	DATE	CHK'D	DATE
A	DRAWING CONVERTED TO SW, OTHER VERSIONS OBSOLETE. REVISED DIMS A, B, H & L	WLL	3/6/2018	DLS	3/6/2018

-	PRELIMINARY DRAWING
-	FINAL DRAWING
X	CONCEPTUAL

PROPRIETARY AND CONFIDENTIAL
PROPERTY OF UNISORB INSTALLATION TECHNOLOGIES. REPRODUCTION OF THIS DRAWING FOR PURPOSES OTHER THAN INSTALLATION OR MAINTENANCE REQUIRES THE EXPRESS PERMISSION OF UNISORB INSTALLATION TECHNOLOGIES. THIS DRAWING IS NOT TO BE REPRODUCED, USED FOR FABRICATION OR DISCLOSED TO THIRD PARTIES WITHOUT PRIOR WRITTEN CONSENT FROM UNISORB INSTALLATION TECHNOLOGIES.

DO NOT SCALE DRAWING
SCALE: NONE

UNISORB® INSTALLATION TECHNOLOGIES
BOX 1000, JACKSON, MI 49204-1000
517-764-6060 FAX: 517-764-5607
www.unisorb.com

TITLE: STANDARD INSTALLATION DRAWING
CUSTOMER / PROJECT: -
MACHINE: FIXATOR WITH OPTIONS 'WES', 'M' & 'D'
MATERIAL: -
DRWN BY: WLL DATE: 3-7-18
CHK'D BY: DLS DATE: 3-7-18
DWG. NO. **469900-08**
SHT 1 / 1
REV **A**

DOCUMENT IS ELECTRONICALLY CONTROLLED. VERIFY REV PRIOR TO USE.

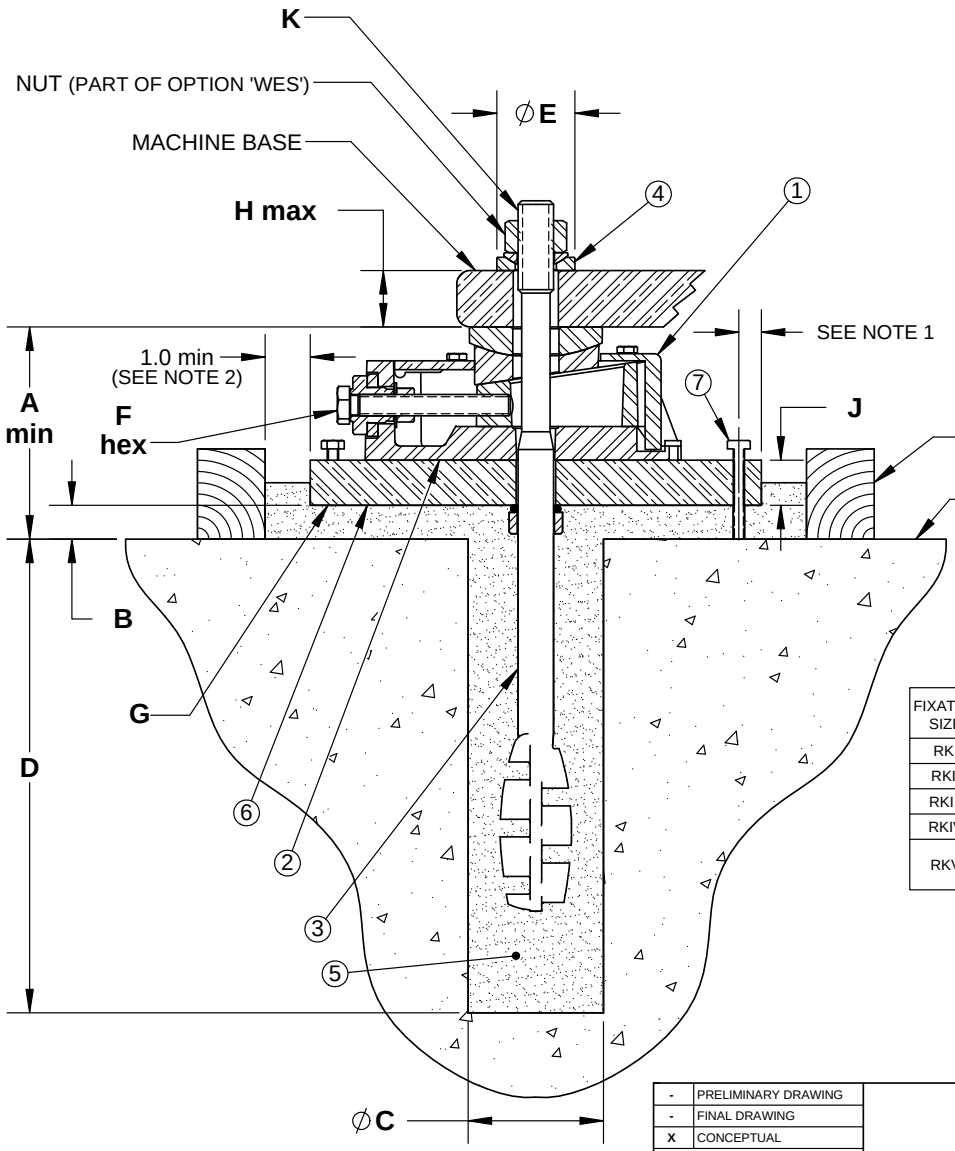

BILL OF MATERIALS

ITEM	QTY	DESCRIPTION
1	1	FIXATOR BASIC UNIT WITH OPTION 'F'
2	1	OPTION 'B' MACHINE BASE
3	1	OPTION 'WES' ANCHOR/HOLD DOWN STUD
4	1	OPTION 'P' SPHERICAL WASHER SET
		OPTION 'R' OVERSIZE SPHERICAL WASHER SET
5	A/R	V-1 NON-SHRINK GROUT
		STANDARD V-100 EPOXY GROUT
6	1	STEEL PLATE, (SEE '**G**' & '**H**' DIM'S). SUPPLIED BY UNISORB OR CUSTOMER
7	3	OPTIONAL LEVELING BOLT, VARIABLE SIZE, FURNISHED BY UNISORB OR CUSTOMER

FIXATOR SIZE	A MIN		B MIN		C		D	E		F hex MM/(IN.)	G	H MAX		J	K
	V-1	V-100	V-1	V-100	V-1	V-100		OPT. 'P'	OPT. 'R'						
RKI	4.43	3.68	1.25	.50	3.00	1.50	9.00	1.57	1.73	19/(.75)	6x9	1.36		1.00	16MM
RKII	5.21	4.46	1.25	.50	3.50	2.00	10.50	1.73	2.20	19/(.75)	7x10	2.54		1.00	20MM
RKIII	6.00	5.25	1.25	.50	4.00	2.50	13.50	2.20	2.68	24/(.94)	8x12	2.94		1.00	24MM
RKIV	7.04	6.29	1.25	.50	5.00	3.00	16.25	2.68	3.07	30/(1.18)	10x15	4.06		1.25	30MM
RKV	8.07	7.33	1.25	.50	36MM 6.00	36MM 3.50	36MM 22.50	36MM 3.07	36MM 3.94	36/(1.42)	12x18	36MM	4.41	1.50	36MM
					42MM 7.00	42MM 4.00	42MM 30.00	42MM 3.94	42MM 4.92			42MM	6.37		42MM

REV.	DESCRIPTION	BY	DATE	CHK'D	DATE
A	DRAWING CONVERTED TO SW, OTHER VERSIONS OBSOLETE. REVISED DIM. A, H & J	WLL	2-27-18	DLS	2-27-18

NOTES:

1. SEE UNISORB DRAWING 469900-10A FOR DIMENSIONAL LAYOUT OF STEEL PLATES.
2. 1" MIN. OUTSIDE OF STEEL PLATE ON 3 SIDES, AND 3" MIN. OUTSIDE OF STEEL PLATE ON GROUT POUR SIDE.

-	PRELIMINARY DRAWING
-	FINAL DRAWING
X	CONCEPTUAL

PROPRIETARY AND CONFIDENTIAL
PROPERTY OF UNISORB INSTALLATION TECHNOLOGIES. REPRODUCTION OF THIS DRAWING FOR PURPOSES OTHER THAN INSTALLATION OR MAINTENANCE REQUIRES THE EXPRESS PERMISSION OF UNISORB INSTALLATION TECHNOLOGIES. THIS DRAWING IS NOT TO BE REPRODUCED, USED FOR FABRICATION OR DISCLOSED TO THIRD PARTIES WITHOUT PRIOR WRITTEN CONSENT FROM UNISORB INSTALLATION TECHNOLOGIES.

DO NOT SCALE DRAWING
SCALE: NONE

UNISORB® INSTALLATION TECHNOLOGIES
BOX 1000, JACKSON, MI 49204-1000
517-764-6060 FAX: 517-764-5607
www.unisorb.com

TITLE: STANDARD INSTALLATION DRAWING
CUSTOMER / PROJECT: -
MACHINE: RK FIXATOR WITH OPTION 'WES' ON STEEL PLATE
MATERIAL: -
DRWN BY: WLL DATE: 3-8-18
CHK'D BY: DLS DATE: 3-8-18
DWG. NO. **469900-10**
SHT 1/1
REV **A**

DOCUMENT IS ELECTRONICALLY CONTROLLED. VERIFY REV PRIOR TO USE.

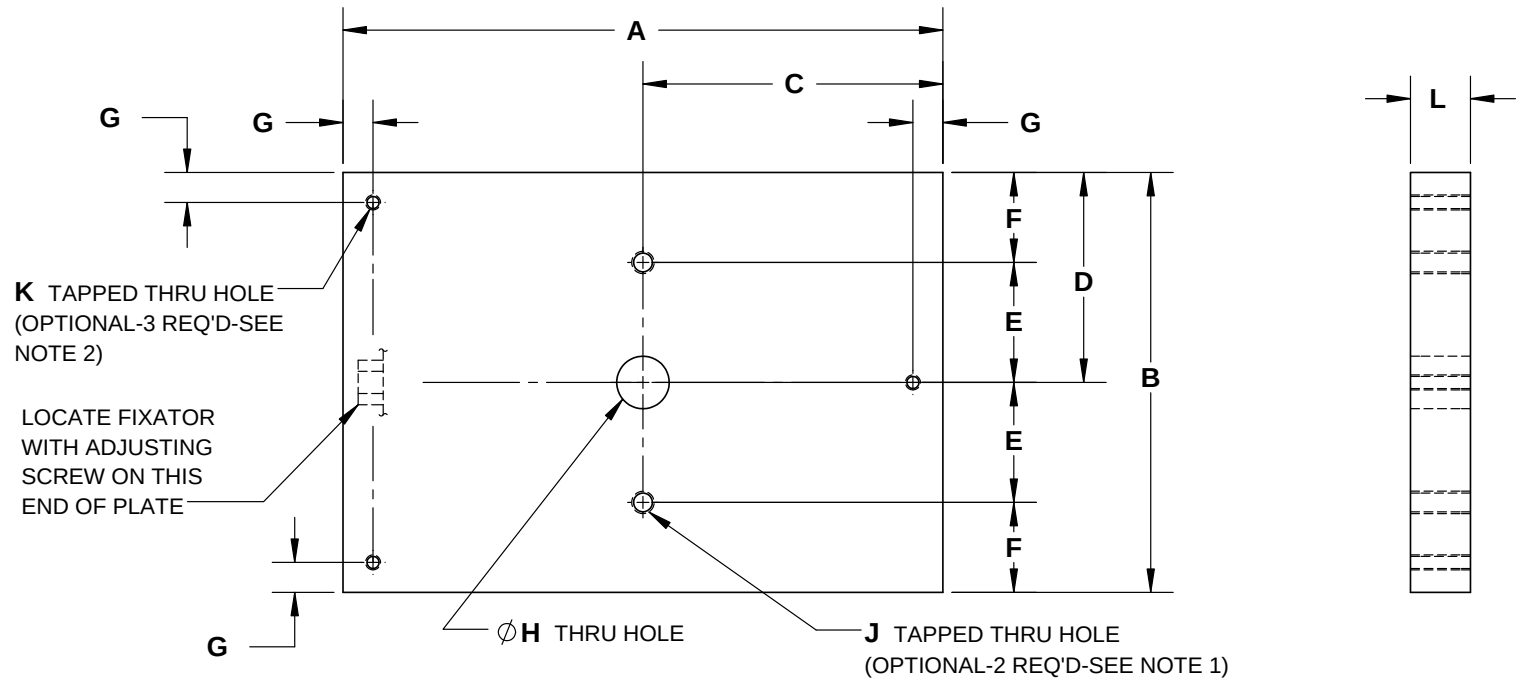

FIXATOR SIZE	A	B	C	D	E	F	G	H		J	K	L
RK I	9.00	6.00	4.50	3.00	1.81	1.19	.50	.69		3/8-16	1/4-20	1.00
RK II	10.00	7.00	5.00	3.50	2.00	1.50	.50	.88		3/8-16	1/4-20	1.00
RK III	12.00	8.00	6.00	4.00	2.62	1.38	.50	1.00		1/2-13	1/4-20	1.00
RK IV	15.00	10.00	7.50	5.00	3.18	1.82	.50	1.25		3/4-10	1/4-20	1.25
RK V	20.00	15.00	10.00	7.50	4.04	3.47	.75	36MM	1.50	1-8	3/8-16	1.50
								42MM	1.75			

BOLTS FOR TAPPED HOLES		
FIXATOR SIZE	J (2) HOLES	K (2) HOLES
RK I	3/8-16 x 1.50 HEX HEAD WITH FLAT WASHER	1/4-20 x 2.00 HEX HEAD
RK II	3/8-16 x 1.50 HEX HEAD WITH FLAT WASHER	1/4-20 x 2.00 HEX HEAD
RK III	1/2-13 x 1.75 HEX HEAD WITH FLAT WASHER	1/4-20 x 2.00 HEX HEAD
RK IV	3/4-10 x 2.25 HEX HEAD WITH FLAT WASHER	1/4-20 x 2.25 HEX HEAD
RK V	1-8 x 2.25 HEX HEAD WITH FLAT WASHER	3/8-16 x 2.50 HEX HEAD

REV.	DESCRIPTION	BY	DATE	CHK'D	DATE
A	DRAWING CONVERTED TO SW, OTHER VERSIONS OBSOLETE	WLL	2-28-18	DLS	2-28-18

NOTES:

1. TAPPED HOLES **J** WILL ONLY BE REQ'D WHEN OPTION 'D' LATERAL STABILIZER IS USED.
2. TAPPED HOLES **K** WILL ONLY BE REQ'D IF CUSTOMER IS GOING TO USE PRE-LEVELING BOLTS.
3. FOR FIXATOR INSTALLATION DRAWING, UTILIZING STEEL PLATES, SEE UNISORB DRAWING 469900-10.

-	PRELIMINARY DRAWING
-	FINAL DRAWING
X	CONCEPTUAL

PROPRIETARY AND CONFIDENTIAL
PROPERTY OF UNISORB INSTALLATION TECHNOLOGIES. REPRODUCTION OF THIS DRAWING FOR PURPOSES OTHER THAN INSTALLATION OR MAINTENANCE REQUIRES THE EXPRESS PERMISSION OF UNISORB INSTALLATION TECHNOLOGIES. THIS DRAWING IS NOT TO BE REPRODUCED, USED FOR FABRICATION OR DISCLOSED TO THIRD PARTIES WITHOUT PRIOR WRITTEN CONSENT FROM UNISORB INSTALLATION TECHNOLOGIES.

DO NOT SCALE DRAWING
SCALE: NONE

UNISORB® INSTALLATION TECHNOLOGIES
BOX 1000, JACKSON, MI 49204-1000
517-764-6060 FAX: 517-764-5607
www.unisorb.com

TITLE: DIMENSIONAL LAYOUT
CUSTOMER / PROJECT: -
MACHINE: STEEL PLATE FOR FIXATOR WITH OPTION 'WES'
MATERIAL: -
DRWN BY: WLL DATE: 3-8-18
CHK'D BY: DLS DATE: 3-8-18
DWG. NO. **469900-10A**
SHT 1 / 1
REV **A**

DOCUMENT IS ELECTRONICALLY CONTROLLED. VERIFY REV PRIOR TO USE.

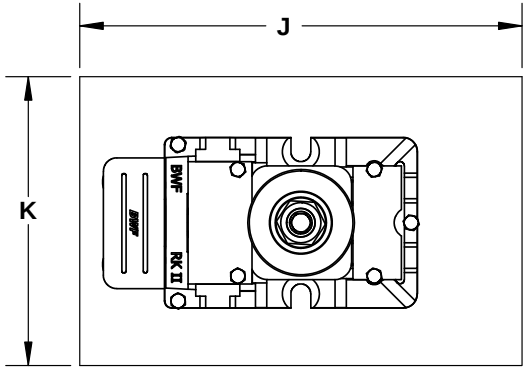

POCKET SIZE
TOP VIEW

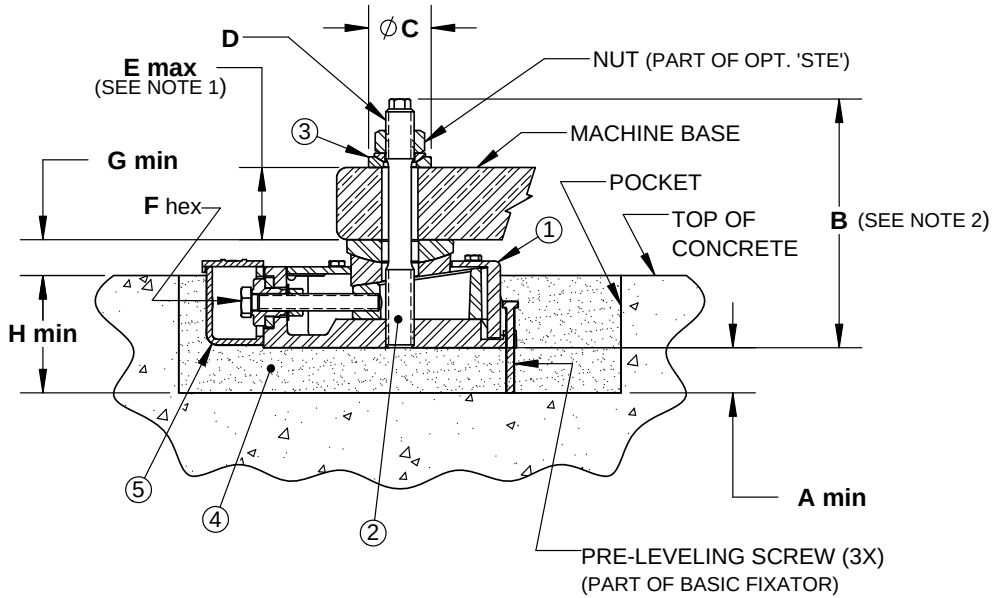

BILL OF MATERIALS

ITEM	QTY	DESCRIPTION
1	1	FIXATOR BASIC UNIT
2	1	OPTION 'STE' HOLD DOWN STUD
3	1	OPTION 'P' SPHERICAL WASHER SET
		OPTION 'R' OVERSIZE SPHERICAL WASHER SET
4	A/R	V-1 NON-SHRINK GROUT
		STANDARD V-100 EPOXY GROUT
5	1	OPTION 'M' ADJUSTMENT BOLT ENCLOSURE

FIXATOR SIZE	A MIN		B	C		D	E	F hex	G	H MIN		J	K
	V-1	V-100		OPT. 'P'	OPT. 'R'		MAX	MM/(IN.)	MIN	V-1	V-100		
RKI	-----	-----	-----	-----	-----	-----	-----	-----	-----	-----	-----	-----	-----
RKII	1.25	.50	6.89	1.73	2.20	20MM	2.17	19/(.75)	.98	3.38	2.63	12.25	8.00
RKIII	1.25	.50	8.46	2.20	2.68	24MM	2.76	24/(.94)	1.18	3.88	3.13	13.75	10.00
RKIV	1.25	.50	10.24	2.68	3.07	30MM	3.35	30/(1.18)	1.38	4.50	3.75	17.75	12.00
RKV	1.25	.50	12.40	3.07	3.94	36MM	4.13	36/(1.42)	1.57	5.13	4.38	20.50	13.00

NOTES:

1. DIMENSION SHOWN IS FOR STANDARD LENGTH OPTION 'STE'. LONGER STUDS ARE AVAILABLE FOR SPECIAL APPLICATIONS WHERE MACHINE FOOT THICKNESS DICTATES.
2. DIMENSION SHOWN IS WHEN USING STANDARD LENGTH OPTION 'STE'.

REV.	DESCRIPTION	BY	DATE	CHK'D	DATE
A	DRAWING CONVERTED TO SW, OTHER VERSIONS OBSOLETE. REVISED DIM A, G, & H.	WLL	3/6/2018	DLS	3/6/2018

-	PRELIMINARY DRAWING
-	FINAL DRAWING
X	CONCEPTUAL

PROPRIETARY AND CONFIDENTIAL
PROPERTY OF UNISORB INSTALLATION TECHNOLOGIES. REPRODUCTION OF THIS DRAWING FOR PURPOSES OTHER THAN INSTALLATION OR MAINTENANCE REQUIRES THE EXPRESS PERMISSION OF UNISORB INSTALLATION TECHNOLOGIES. THIS DRAWING IS NOT TO BE REPRODUCED, USED FOR FABRICATION OR DISCLOSED TO THIRD PARTIES WITHOUT PRIOR WRITTEN CONSENT FROM UNISORB INSTALLATION TECHNOLOGIES.

DO NOT SCALE DRAWING
SCALE: NONE

UNISORB®
INSTALLATION TECHNOLOGIES
BOX 1000, JACKSON, MI 49204-1000
517-764-6060 FAX: 517-764-5607
www.unisorb.com

TITLE: STANDARD INSTALLATION DRAWING
CUSTOMER / PROJECT: -
MACHINE: FIXATOR WITH OPTIONS 'STE' & 'M'
MATERIAL: -
DRWN BY: WLL DATE: 3-9-18
CHK'D BY: DLS DATE: 3-9-18
DWG. NO. **469900-12**
SHT 1 / 1
REV **A**

DOCUMENT IS ELECTRONICALLY CONTROLLED. VERIFY REV PRIOR TO USE.

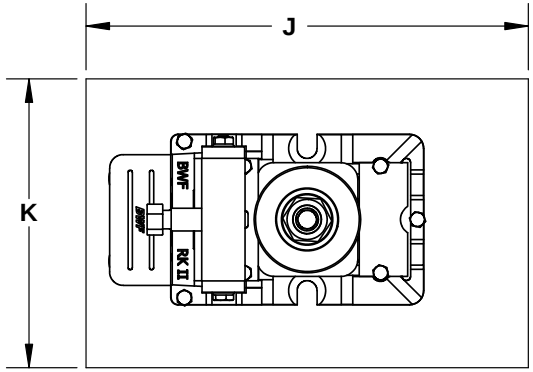

POCKET SIZE
TOP VIEW

BILL OF MATERIALS

ITEM	QTY	DESCRIPTION
1	1	FIXATOR BASIC UNIT
2	1	OPTION 'STE' HOLD DOWN STUD
3	1	OPTION 'P' SPHERICAL WASHER SET
		OPTION 'R' OVERSIZE SPHERICAL WASHER SET
4	A/R	V-1 NON-SHRINK GROUT
		STANDARD V-100 EPOXY GROUT
5	1	OPTION 'M' ADJUSTMENT BOLT ENCLOSURE
6	1	OPTION 'D' LATERAL STABILIZER

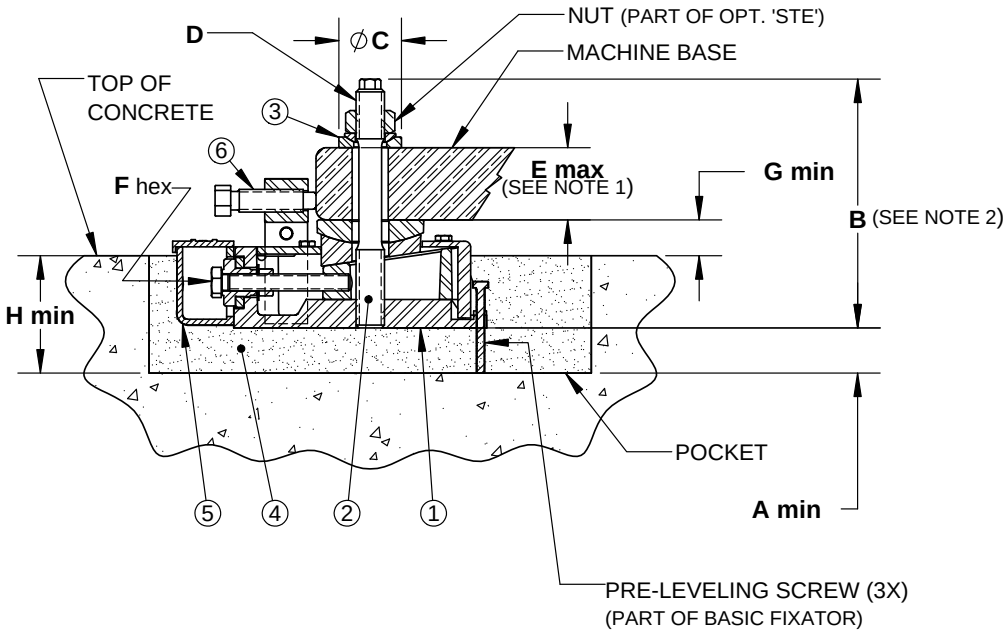

FIXATOR SIZE	A MIN		B	C		D	E MAX	F hex MM/(IN.)	G MIN	H MIN		J	K
	V-1	V-100		OPT. 'P'	OPT. 'R'					V-1	V-100		
RKI	-----	-----	-----	-----	-----	-----	-----	-----	-----	-----	-----	-----	-----
RKII	1.25	.50	6.89	1.73	2.20	20MM	2.17	19/(.75)	.98	3.38	2.63	12.25	8.00
RKIII	1.25	.50	8.46	2.20	2.68	24MM	2.76	24/(.94)	1.18	3.88	3.13	13.75	10.00
RKIV	1.25	.50	10.24	2.68	3.07	30MM	3.35	30/(1.18)	1.38	4.50	3.75	17.75	12.00
RKV	1.25	.50	12.40	3.07	3.94	36MM	4.13	36/(1.42)	1.57	5.13	4.38	20.50	13.00

NOTES:

1. DIMENSION SHOWN IS FOR STANDARD LENGTH OPTION 'STE'. LONGER STUDS ARE AVAILABLE FOR SPECIAL APPLICATIONS WHERE MACHINE FOOT THICKNESS DICTATES.
2. DIMENSION SHOWN IS WHEN USING STANDARD LENGTH OPTION 'STE'.

REV.	DESCRIPTION	BY	DATE	CHK'D	DATE
A	DRAWING CONVERTED TO SW, OTHER VERSIONS OBSOLETE. REVISED DIM A, G, & H.	WLL	3/6/2018	DLS	3/6/2018

-	PRELIMINARY DRAWING
-	FINAL DRAWING
X	CONCEPTUAL

PROPRIETARY AND CONFIDENTIAL
PROPERTY OF UNISORB INSTALLATION TECHNOLOGIES. REPRODUCTION OF THIS DRAWING FOR PURPOSES OTHER THAN INSTALLATION OR MAINTENANCE REQUIRES THE EXPRESS PERMISSION OF UNISORB INSTALLATION TECHNOLOGIES. THIS DRAWING IS NOT TO BE REPRODUCED, USED FOR FABRICATION OR DISCLOSED TO THIRD PARTIES WITHOUT PRIOR WRITTEN CONSENT FROM UNISORB INSTALLATION TECHNOLOGIES.

DO NOT SCALE DRAWING
SCALE: NONE

UNISORB®
INSTALLATION TECHNOLOGIES
BOX 1000, JACKSON, MI 49204-1000
517-764-6060 FAX: 517-764-5607
www.unisorb.com

TITLE: STANDARD INSTALLATION DRAWING
CUSTOMER / PROJECT: -
MACHINE: FIXATOR WITH OPTIONS 'STE', 'M' & 'D'
MATERIAL: -
DRWN BY: WLL DATE: 3-12-18
CHK'D BY: DLS DATE: 3-12-18
DWG. NO. **469900-14**
SHT 1 / 1
REV **A**

DOCUMENT IS ELECTRONICALLY CONTROLLED. VERIFY REV PRIOR TO USE.

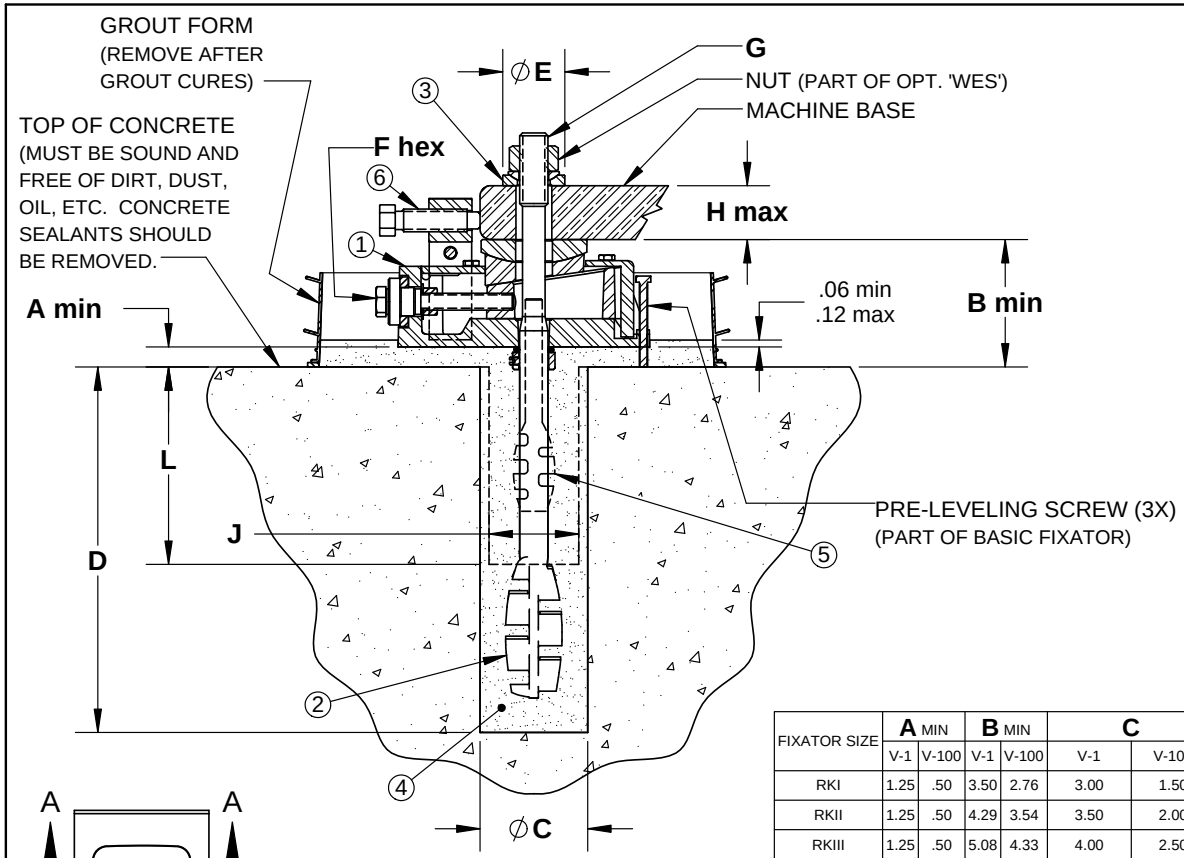

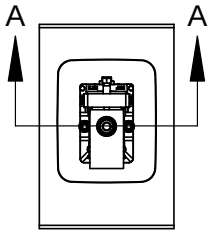

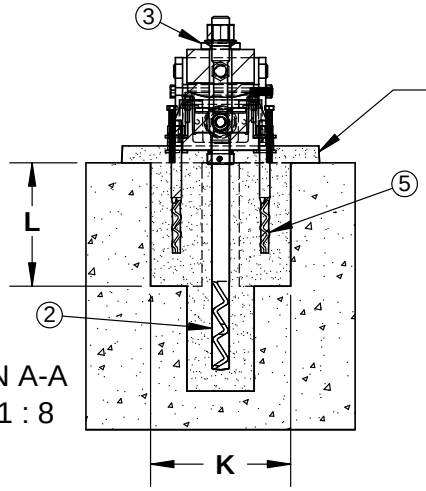

SHOWN WITHOUT GROUT FORM, FOR CLARITY.

SECTION A-A
SCALE 1 : 8

BILL OF MATERIALS

ITEM	QTY	DESCRIPTION
1	1	FIXATOR BASIC UNIT WITH OPTION 'F'
2	1	OPTION 'WES' ANCHOR/HOLD DOWN STUD
3	1	OPTION 'P' SPHERICAL WASHER SET
		OPTION 'R' OVERSIZE SPHERICAL WASHER SET
4	A/R	V-1 NON-SHRINK GROUT
		STANDARD V-100 EPOXY GROUT
5	2	OPTION 'C' SIDE ANCHOR BOLT
6	1	OPTION 'D' LATERAL STABILIZER

FIXATOR SIZE	A MIN		B MIN		C		D	E		F hex	G	H MAX	J		K		L
	V-1	V-100	V-1	V-100	V-1	V-100		OPT. 'P'	OPT. 'R'	MM/(IN.)			V-1	V-100	V-1	V-100	
RKI	1.25	.50	3.50	2.76	3.00	1.50	9.00	1.57	1.73	19/(.75)	16MM	2.36	2.50	1.75	6.25	5.50	5.50
RKII	1.25	.50	4.29	3.54	3.50	2.00	10.50	1.73	2.20	19/(.75)	20MM	3.54	2.50	1.75	6.25	5.50	5.50
RKIII	1.25	.50	5.08	4.33	4.00	2.50	13.50	2.20	2.68	24/(.94)	24MM	3.94	2.75	2.00	8.00	7.25	9.50
RKIV	1.25	.50	5.87	5.12	5.00	3.00	16.25	2.68	3.07	30/(1.18)	30MM	5.31	3.25	2.50	9.50	9.00	11.50
RKV	1.25	.50	6.65	5.91	36MM 6.00	36MM 3.50	36MM 22.50	36MM 3.07	36MM 3.94	36/(1.42)	36MM	5.91	4.00	3.50	12.00	10.50	13.75
					42MM 7.00	42MM 4.00	42MM 30.00	42MM 3.94	42MM 4.92		42MM	7.87					

REV.	DESCRIPTION	BY	DATE	CHK'D	DATE
A	DRAWING CONVERTED TO SW, OTHER VERSIONS OBSOLETE. REVISED DIMENSION H	WLL	3/14/2018	DLS	3/14/2018

-	PRELIMINARY DRAWING
-	FINAL DRAWING
X	CONCEPTUAL

PROPRIETARY AND CONFIDENTIAL
PROPERTY OF UNISORB INSTALLATION TECHNOLOGIES. REPRODUCTION OF THIS DRAWING FOR PURPOSES OTHER THAN INSTALLATION OR MAINTENANCE REQUIRES THE EXPRESS PERMISSION OF UNISORB INSTALLATION TECHNOLOGIES. THIS DRAWING IS NOT TO BE REPRODUCED, USED FOR FABRICATION OR DISCLOSED TO THIRD PARTIES WITHOUT PRIOR WRITTEN CONSENT FROM UNISORB INSTALLATION TECHNOLOGIES.

DO NOT SCALE DRAWING
SCALE: NONE

UNISORB® INSTALLATION TECHNOLOGIES
BOX 1000, JACKSON, MI 49204-1000
517-764-6060 FAX: 517-764-5607
www.unisorb.com

TITLE: STANDARD INSTALLATION DRAWING
CUSTOMER / PROJECT: -
MACHINE: FIXATOR WITH OPTIONS "WES", "C", & "D"
MATERIAL: -
DRWN BY: WLL DATE: 3-13-18
CHK'D BY: DLS DATE: 3-13-18
DWG. NO. **469900-15**
SHT 1 / 1
REV **A**

DOCUMENT IS ELECTRONICALLY CONTROLLED. VERIFY REV PRIOR TO USE.

Suggested Grout Quantites

UNISORB

Cubic Feet of Grout Per Fixator							
Grout Type	RK	Options					
		Basic Unit	wes*	c*	le*	m	les
V-1	RKI 9” x 11” Grout Form	.13	.17	.17	.20	.12	.16
V-100		.06	.07	—	.13		**.02
V-1	RKII 9” x 11” Grout Form	.13	.19	.20	.20	.18	.22
V-100		.06	.08	.09	.13		**.02
V-1	RKIII 9” x 11” Grout Form	.13	.20	.25	.20	.32	.39
V-100		.06	.09	.12	.13		**.03
V-1	RKIV 12” x 15” Grout Form	.23	.41	.44	.24	.59	.71
V-100		.10	.15	.25	.11		**.05
V-1	RKV 12” x 15” Grout Form	.23	36mm = .60 42mm = .90	.61	.24	.85	1.04
V-100		.10	36mm = .19 42mm = .27	.39	.11		**.06

Yields for Grout:

V-1	48# Bag	= .40 Cu. Ft.
V-100	11# Kit	= .10 Cu. Ft.
	22# Kit	= .21 Cu. Ft.
	55# Kit	= .53 Cu. Ft.

* Includes basic unit grout (above concrete)
** Add this amount per inch in specified length of Option les

Notes:
1. V-1 Grout for Basic Unit (above concrete) is figured @ 2-1/4” thick.
2. V-100 Grout for Basic Unit (above concrete) is figured @ 1” thick.
3. Options m and les refer to either V-1 or V-100 (no grout above surface of concrete).
4. Option les includes grout quantity for Option m.

Proper Grouting Procedure

1 **PREPARATION** — All grout will adhere to whatever it contacts, including debris. Therefore, if the grout is to bond to the concrete, all contact surfaces should be thoroughly cleaned. Cored holes cut through the large aggregate in the concrete and are suitable for grouting after cleaning.

V-1® Cement Based Grout

Cement grout must properly cure, not dry out. After cleaning the concrete surface, the foundation must be saturated with water for 24 hours.

V-100® Epoxy Grout

Epoxy will bond best to a dry surface. Core drilling and all cleaning should be completed with enough time for the concrete to dry before grouting.

2 **FORMING** — Forms should allow rapid and continuous placement of grout. Forms need to be sealed water tight to the foundation. Good engineering practice is to have the forms placed at a distance from the equipment that is equal to the depth. Excessive areas of grout not under the equipment should be avoided. Allow sufficient space along one edge to place grout. Provide head boxes as required for long flows.

V-1® Cement Based Grout

May be used neat, or extended with pea gravel for thicker pours.

V-100® Standard Epoxy Grout

Two-part expoxy may be used for thinner pours, three-part epoxy for thicker pours. Epoxy will bond to itself, so multiple lifts may be used.

3 **TEMPERATURE** — In general, grout will cure and develop strength slowly at low temperatures, and cure and develop strength faster at high temperatures.

V-1® Cement Based Grout

Do not allow to freeze. Refer to product data sheet for additional information.

V-100® Standard Epoxy Grout

Specific epoxy formulations are available for temperature extremes. Refer to product data sheet for additional information.

4 **PLACEMENT** — To assure full support of the equipment, the grout should be placed from one side only, and allowed to flow to the other side, forcing air out ahead of it. The level of grout should be maintained above the bottom of the equipment on the side grout is being placed to avoid air pockets.

V-1® Cement Based Grout

Measure water and never add more water and remix after initial set.

V-100® Standard Epoxy Grout

Epoxy comes in pre-measured kits. Simply mix the resin, continue mixing while adding the hardner. For three-part kits, the aggregate is added last.

5 **CURING** — Forms should not be removed until after final set.

V-1® Cement Based Grout

Avoid losing water from the fresh grout and stopping the cure cycle. Keep the surface moist with wet rags. Full strength is achieved at 28 days. Consult data sheet for rate of strength development.

V-100® Standard Epoxy Grout

Keep dry. If outdoors, protect from rain until initial set. Full strength is achieved at 7 days. Consult data sheet for rate of strength development.

6 **CLEANUP** —

V-1® Cement Based Grout

Clean up with water prior to initial set.

V-100® Standard Epoxy Grout

Wipe epoxy off equipment prior to initial set.

Notes:

UNISORB®

INSTALLATION TECHNOLOGIES
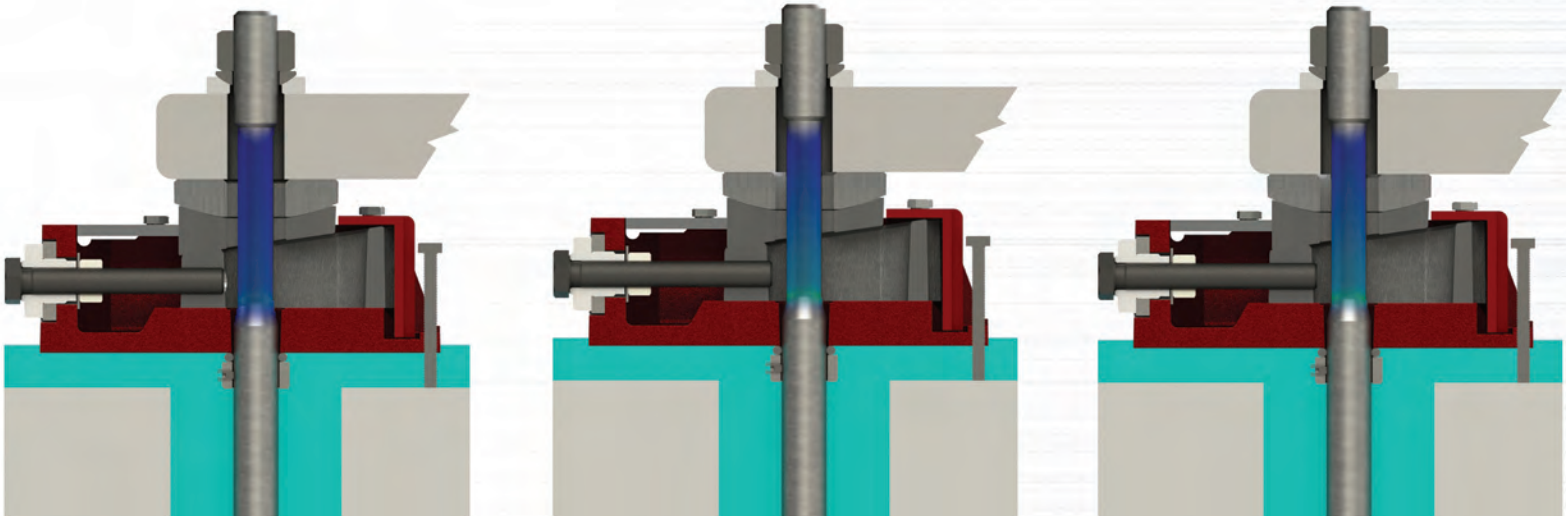
www.unisorb.com
888-486-4767 • 517-764-6060
Box 1000, Jackson, MI 49204