force one

FORCE ONE MACHINERY CO., LTD.
NO.5, Lane 272, Dalin Road, Daya District,
Taichung City, 428 Taiwan
TEL:+886-4-2560-2506 FAX:+886-4-2560-2460
E-mail:sales@forceone.com.tw
E-mail:force.one@msa.hinet.net
http://www.forceone.com.tw

Distributed by

2017.12.1000E

ISO 9001

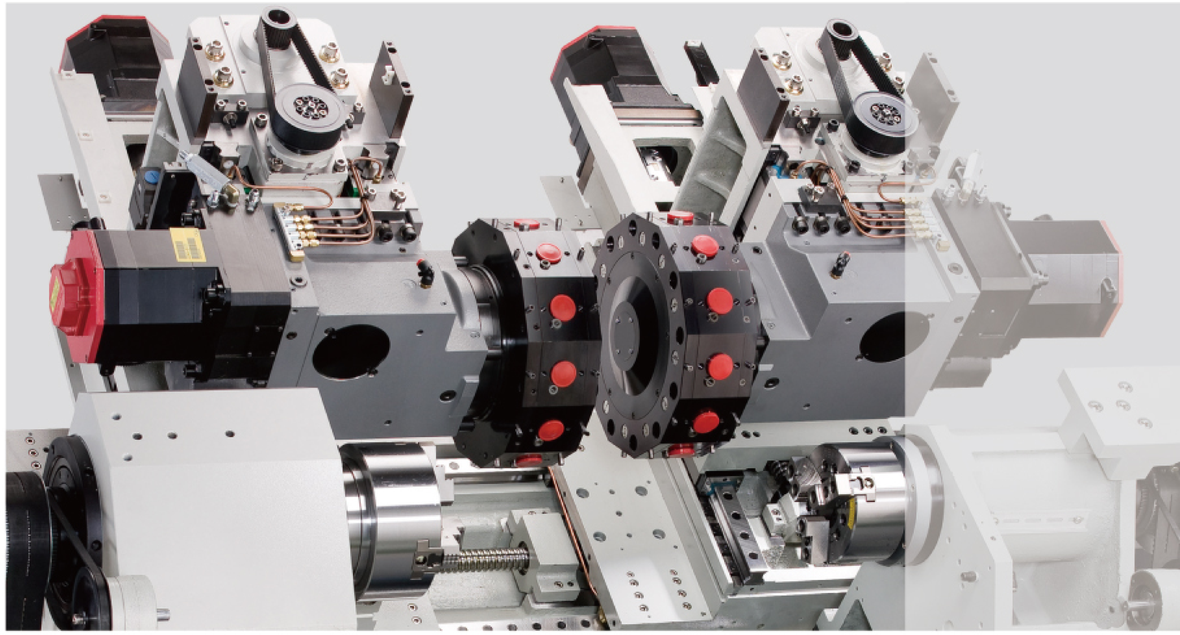

Y Axis Turning Center FCL-Y / FCL-TSY / FCL-TTY

FCL-Y AXIS SERIES

force one

FORCE ONE MACHINERY CO., LTD.

FORCE ONE Y axis CNC Lathe

Maximize Machining Versatility, Productivity and Profits with Proven FORCE ONE Y-axis Turning Center

The **FORCE ONE Y-axis** Turning Centers are designed with a Y-axis turret. The series of turning center has a 45 degree slant bed construction combined with heavy duty roller type linear guideways on X, Z, Y-axis. A wide range of axis configurations are available that meet flexible machining requirements.

FCL-20TSY series Features:

- Swing over bed ϕ 780 mm.
- Working length 500 mm.
- Max. turning diameter ϕ 300 mm
- 45 degrees slant bed
- Spindle nose: (Main: A2-6), (Sub: A2-5)

FCL-25Y series Features:

- Swing over bed ϕ 780 mm.
- Working length 590 mm.
- Max. turning diameter ϕ 300 mm
- 45 degrees slant bed
- Spindle nose: A2-6

FCL-20TTY series Features:

- Swing over bed ϕ 780 mm.
- Working length 290 mm.
- Max. turning diameter ϕ 300 mm
- 45 degrees slant bed
- Spindle nose: (Main: A2-6), (Sub: A2-5)

RUGGEDLY AND PREDISELY CONSTRUCTED THROUGHOUT

- The major machine parts, such as the base, saddle, headstock, slide, sub spindle and tailstock are made of Meehanite cast iron and tempered to relieve stress thereby ensuring lifetime accuracy.
- 45 degree slant bed construction features efficient chip removal and firm support.
- High performance servo motor are directly coupled to the pre-tensioned ball screws.
- Roller linear guideways on X and Z axis.
- Box guideways on B axis.

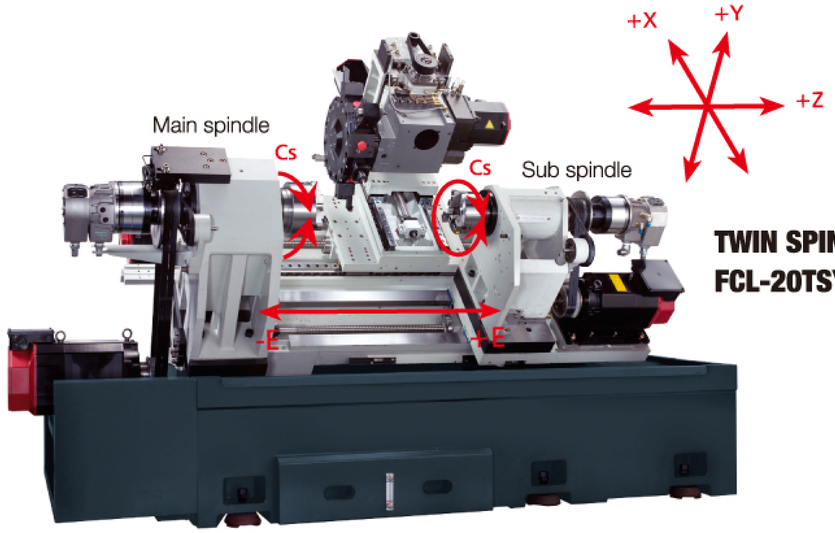

TWIN SPINDLE / SINGLE TURRET
FCL-20TSY

SINGLE SPINDLE / SINGLE TURRET
FCL-25Y

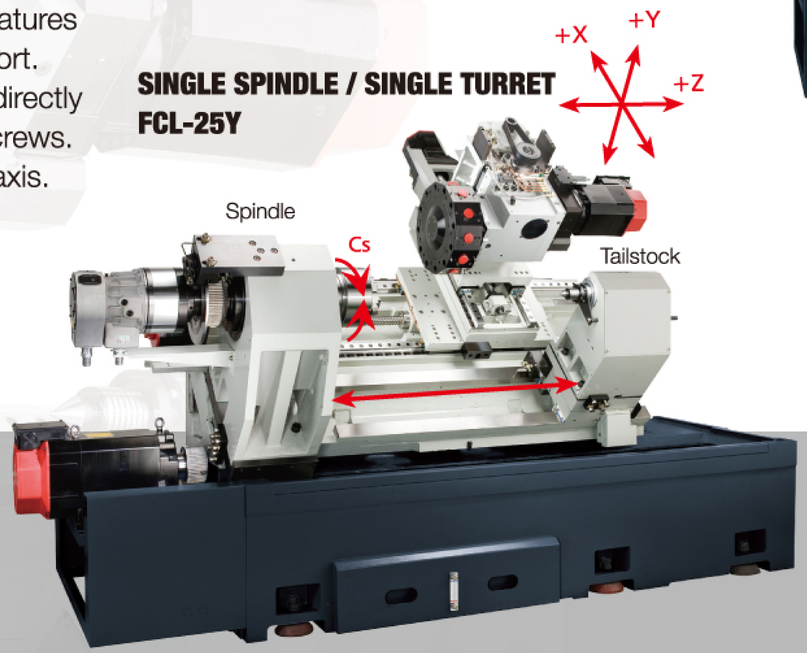

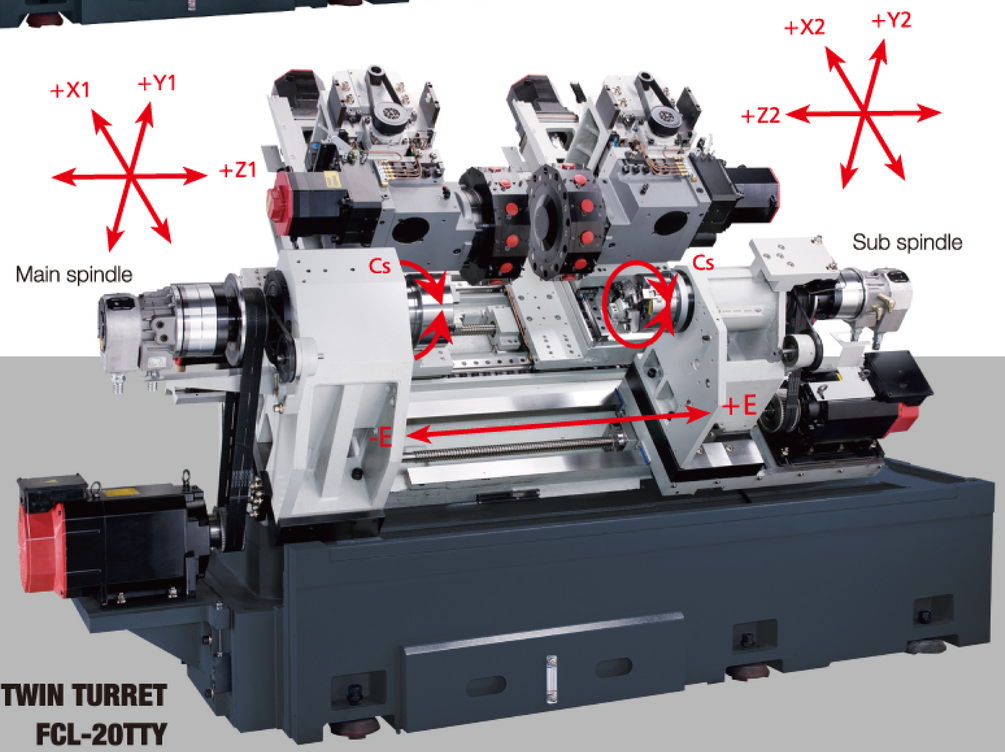

TWIN SPINDLE / TWIN TURRET
FCL-20TTY

Roller linear guideways on **Y axis** that ensures high stability during heavy cutting.

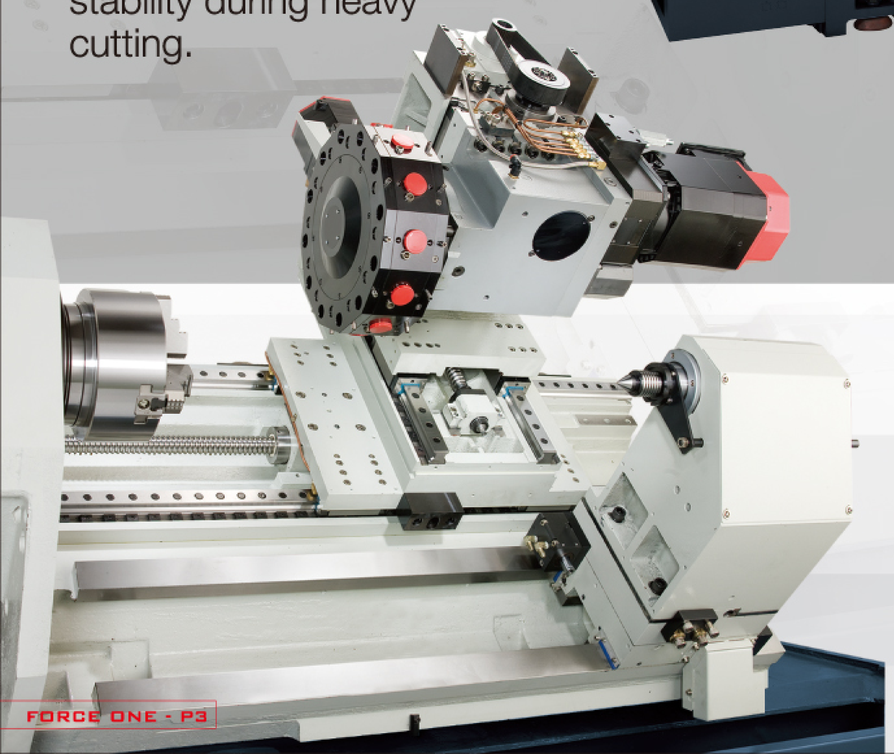

TORQUE LIMITER
(OPT.)

In case colliding occurs, the torque limiter will release to reduce impact force that ensures the machine accuracy.

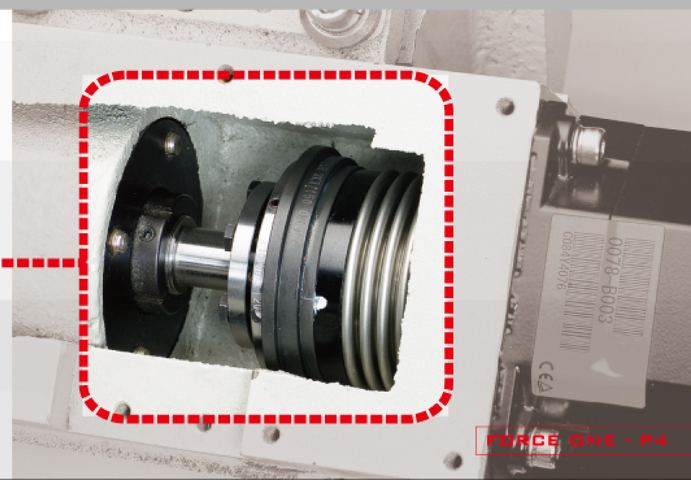

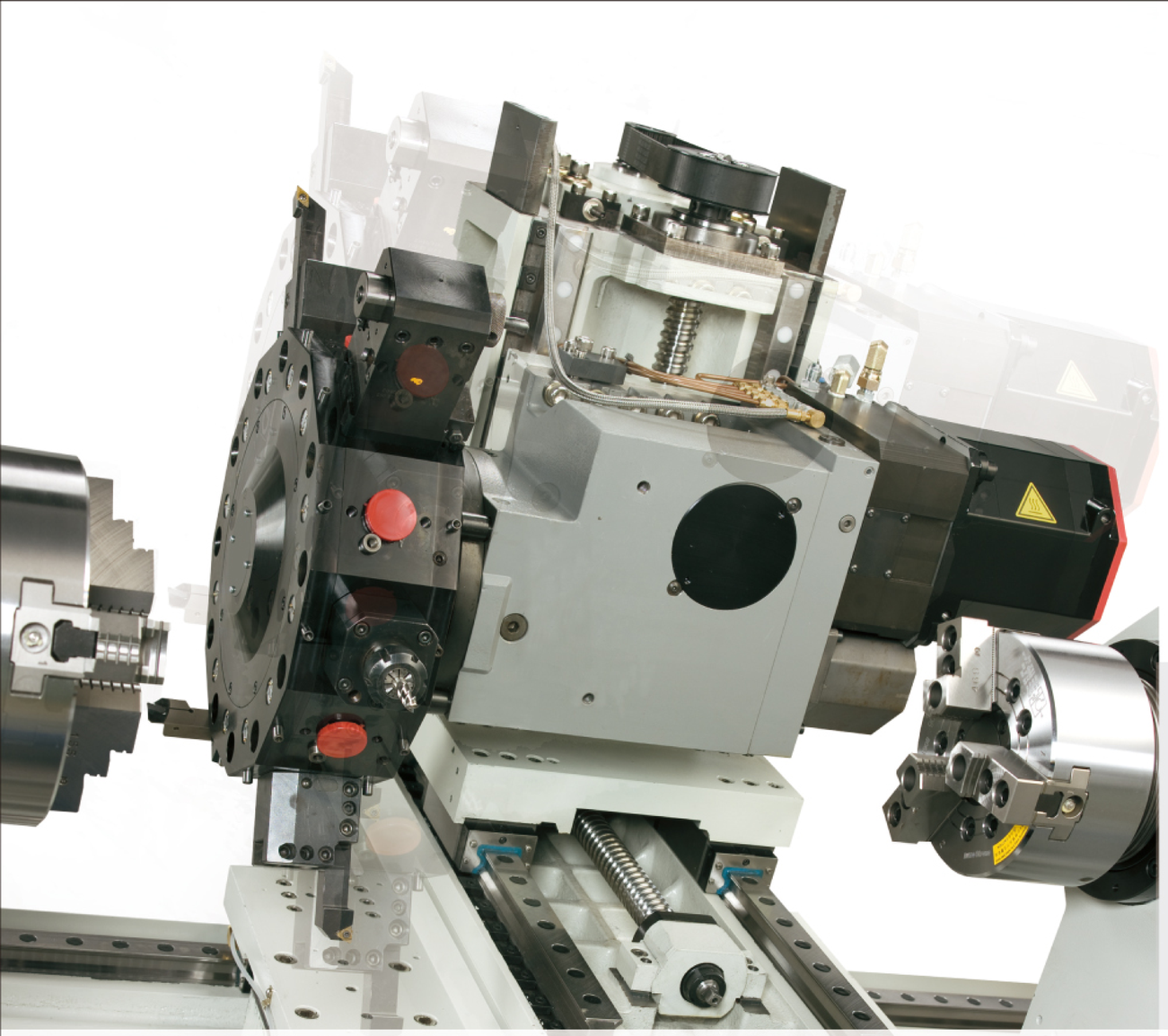

TWIN SPINDLE / SINGLE TURRET
TWIN SPINDLE / TWIN TURRET

- The combination of the main spindle and sub spindle enables the entire workpiece to be machined at one time.

Y AXIS TURRET

- Fast indexing turret features bi-direction rotation.
- High rigidity for front and back machining.
- High stiffness and accuracy tanks to the structure configuration and to slideway sizing.

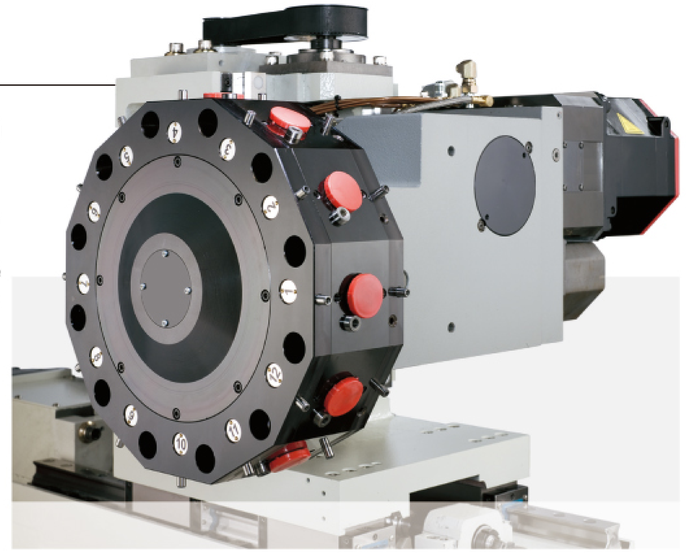

PRECISION SPINDLE

- The cartridge type is conveniently removed allowing for convenient servicing.
- The spindle runs on class P4 precision bearings providing high axial thrust capability and superior radial stability. This ensures high precision during heavy duty turning.

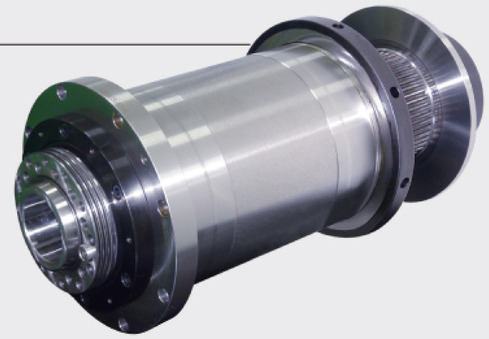

C-AXIS AND TD AXIS TURRET

- Employs Radial type disc, the Radial VDI, a 12-position power turret with Fanuc motor. (Rotating tool holder and tools not included.)
- High indexing resolution of 0.001 for precision contour / index control.
- Hydraulic disk brake locking provides maximum stability during milling and contouring.
- The unit allows front and back machining with fast tool change.
- The turret disk and TD axis are driven by a motor.

Machine Features:

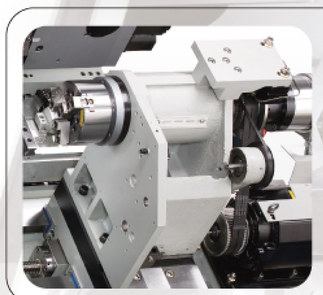

SUB SPINDLE (FCL-TSY/TTY)
Synchronization for main and sub spindle. The workpiece can be machining at one time.

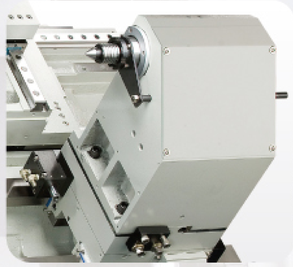

PROGRAMMABLE TAILSTOCK (FCL-Y)
Designed for saving time and manpower. The orientation of tailstock is high-precision.

HIGH PRESSURE COOLANT PUMP

HYDRAULIC POWER UNIT
The hydraulic power unit employs high quality components for long service life and stable motions. The unit delivers high pressure to the turret, CS Brake and 3-jaw chuck.

ELECTRICAL CABINET
The entire control circuit in the electrical cabinet is well planned for easy maintenance. Top quality electronic components assure extra stable control performance and long service life.

CONTROL (FCL-Y/TSY)
User-friendly operations are designed and more convenient for users.

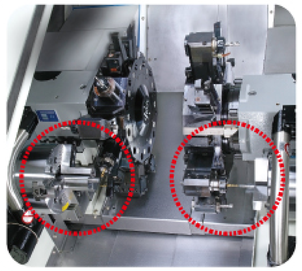

One cycle can finish front side & back machining / parts catcher

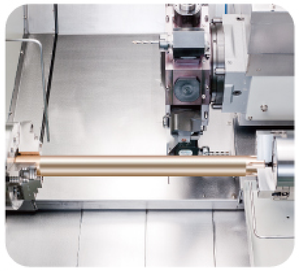

SYNCHRONIZED MACHINING ON TWO SPINDLES
The main spindle and the sub spindle run synchronizely permitting workpiece machining at one time.

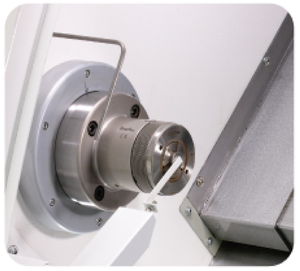

PARTS CUT-OFF DETECTOR
The detector is used for detecting if the part is completely cut off. It prevents cutting problem on twin spindles caused by cut-off failure.

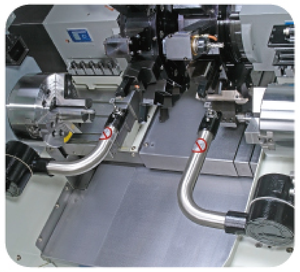

MAIN SPINDLE TOOL SETTER AND SUB-SPINDLE TOOL SETTER
Designed for reducing tool set-up time, the tool setter automatically detects tool wear condition.

Working capacity:

UNIT: mm

● FCL - 20Y

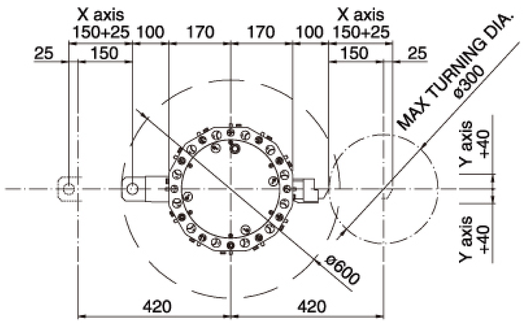

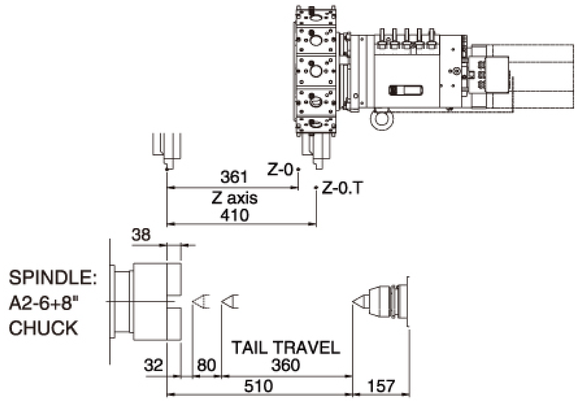

● FCL - 20TSY

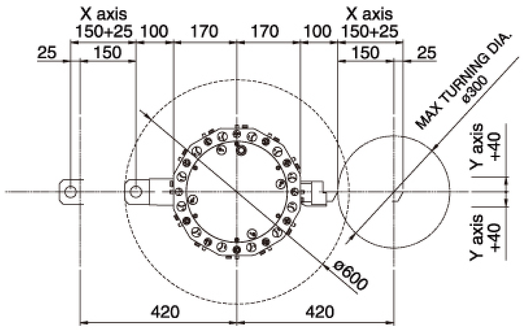

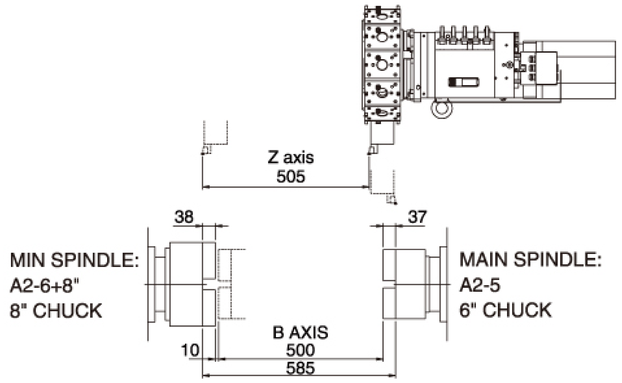

● FCL - 25TTY

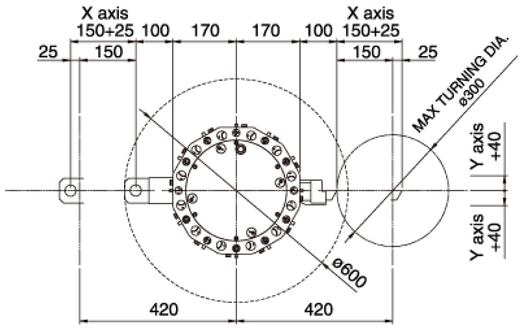

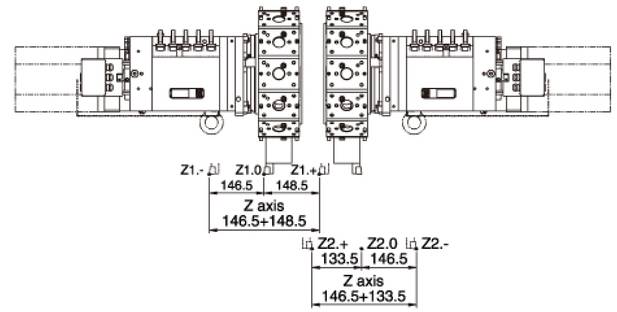

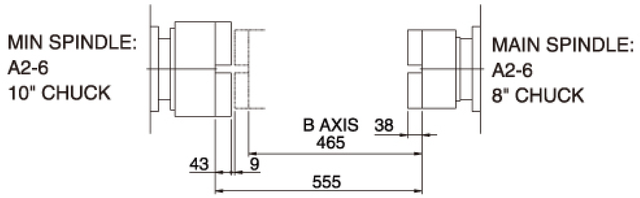

Advanced Design Concept
Ensures User-friendly Operations!

C-Axis Process Drawing

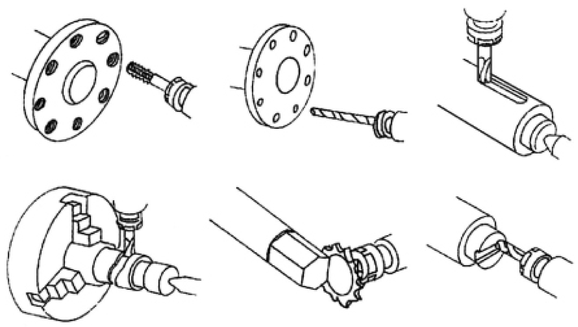

Specifications

Model	FCL-20Y / 25Y / 15TSY FCL-20TSY / 15TTY / 20TTY	FCL-30Y / 30TSY
C-Axis Precision	0.001	
Power Turret	Type 16	Type 20
Max. Speed	4000 rpm	4000 rpm
Drilling	ϕ1-13mm	ϕ2.5-20mm
Milling	ϕ1-13mm	ϕ2.5-20mm
Taper	M1-M10	M3-M12
Tool Shank Size	ϕ32mm	ϕ40mm
Motor	20Y/25Y:AC 2.2/3.7 KW 15TSY/20TSY/15TTY/20TTY:AC 3.0 KW	30Y:AC 3.7/5.5 KW 30TSY:AC 3.0 KW

VDI for reference only

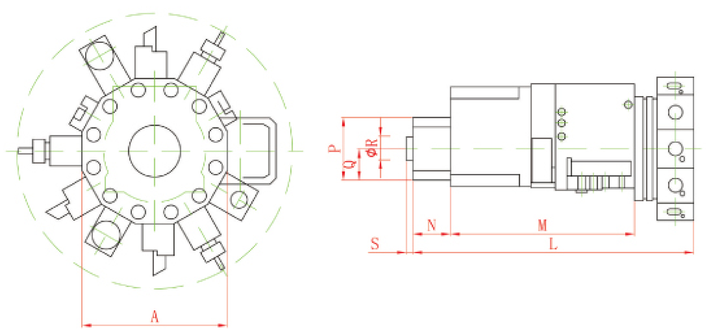

VDI

No.	Tool / Model	FCL-20Y / 25Y / 15TSY FCL-20TSY / 15TTY / 20TTY	FCL-30Y/30TSY
1	Bore	ϕ8. ϕ10. ϕ12. ϕ16. ϕ20. ϕ25. ϕ32.	ϕ8. ϕ10. ϕ12. ϕ16. ϕ20. ϕ25. ϕ32. ϕ40.
2	Shank Dia.	□20(25 opt.)	□25
3	End	□20(25 opt.)	□25
4	Cut	20	25
5	Tap	ϕ16	ϕ20
6	Drill	MT#1,#2,#3	MT#2,#3,#4

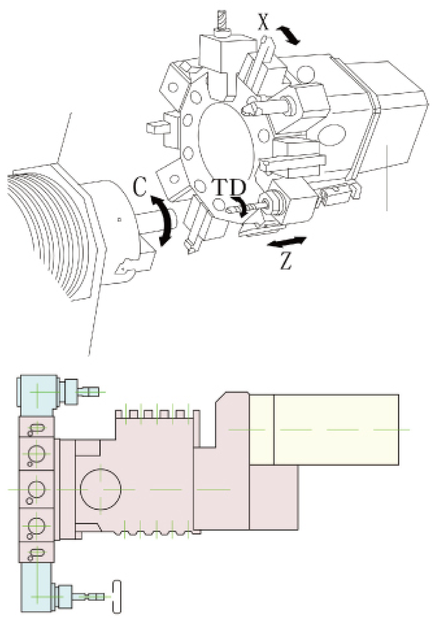

Radial Driven Tool Systerm

VDI Servo Turret Front and Back Machining

Specification:

MODEL		Unit	20Y	25Y	30Y	15TSY	20TSY	30TSY	15TTY	20TTY	25TTY
			SINGLE SPINDLE / SINGLE TURRET			TWIN SPINDLE / SINGLE TURRET			TWIN SPINDLE / TWIN TURRET		
Capacity	No. of axis	-	4 axis (X+Z+C+Y)			7 Axis(X+Z+B+C1+C2+Y+TD)			11 Axis(X1+Z1+C1+B+Y1+TD1+X2+Z2+C2+Y2+TD2)		
	Swing Over bed	mm(in)	Φ780(30.70)			Φ780(30.70)			Φ780(30.70)		
	Max. Turning Dia.	mm(in)	Φ300(11.81)	Φ300(11.81)	Φ300(11.81)	Φ300(11.81)	Φ300(11.81)	Φ290(11.41)	Φ300(11.81)		
	Working Length	mm(in)	365(14.37)	590(23.22)	530(20.87)	260(10.23)	500(19.69)	470(18.5)	290(11.47)		
Spindle	Spindle Nose	-	A2-6	A2-6	A2-8	Main:A2-5	Sub: A2-5	Main: A2-6	Sub: A2-5	Main: A2-8	Sub: A2-6
	Spindle Bore	mm(in)	Φ61(2.40)	Φ77(3.03)	Φ90(3.54)	Φ56(2.2)	Φ56(2.2)	Φ61(2.4)	Φ56(2.2)	Φ90(3.54)	Φ61(2.4)
	Bar Capacity	mm(in)	Φ52(2.04)	Φ65(2.55)	Φ77(3.03)	Φ45(1.7)	Φ45(1.7)	Φ51(2)	Φ45(1.7)	Φ77(3)	Φ51(2)
	Range of Spindle Speed	rpm	4200	3500	Std.: 3500 Opt.: 2800	10 - 6000	10 - 6000	10 - 4200	10 - 6000	10 - 3500	10 - 4200
	Hydraulic Chuck	mm(in)	Φ210 (8)	Φ254 (10)	Std.: Φ254(10) Opt.: Φ305 (12)	Φ169(6)	Φ169(6)	Φ210(8)	Φ169(6)	Φ254(10)	Φ210(8)
	No. of Spindle Speed	-	Infinitely variable			Infinitely variable			Infinitely variable		
Turret	Turret Type	-	VDI 30		VDI 40	VDI 30		VDI 40	VDI 30 * 2 sets		
	Tool Station / DIN	-	12 Tools / DIN 5480			12 Tools / DIN 5480			12 Tools / DIN 5480		
	O.D. Tooling	mm(in)	20(0.75)	20(0.75)	25(1)	20(0.75)	20(0.75)	25(1)	20(0.75)	20(0.75)	20(0.75)
	I.D. Tooling	mm(in)	Φ32(1.25)	Φ32(1.25)	Φ40(1.5)	Φ32(1.25)	Φ32(1.25)	Φ40(1.5)	Φ32(1.25)	Φ32(1.25)	Φ32(1.25)
	Living Tools Speed	rpm	4000			4000			4000		
Cross Slide (X Axis) & Carriage (Z、B Axis) & Y Axis	X Axis Travel	mm(in)	175(6.88)	175(6.88)	170(6.69)	175(6.88)	175(6.88)	165(6.49)	-		
	Z Axis Travel	mm(in)	410(16.14)	685(26.96)	610(24.01)	224(8.81)	500(19.69)	455(17.91)	-		
	B Axis Travel	mm(in)	-	-	-	250(9.84)	500(19.69)	460(18.11)	520(20.47)	500(19.69)	465(18.30)
	Y Axis Travel	mm(in)	±40(1.57)	±40(1.57)	±60(2.36)	±40(1.57)	±40(1.57)	±60(2.36)	-		
	X1 / X2 Axis Travel	mm(in)	-			-			175(6.88)		
	Z1 / Z2 Axis Travel	mm(in)	-			-			295(11.61)		
	Y1 / Y2 Axis Travel	mm(in)	-			-			±40(1.57)		
	Rapid Traverse Speed (X Axis)	M/min	30			30			-		
	Rapid Traverse Speed (Z Axis)	M/min	30			30			-		
	Rapid Traverse Speed (B Axis)	M/min	-			20			20		
	Rapid Traverse Speed (Y Axis)	M/min	7			7			-		
	Rapid Traverse Speed (X1 / X2 Axis)	M/min	-			-			20		
	Rapid Traverse Speed (Z1 / Z2 Axis)	M/min	-			-			20		
	Rapid Traverse Speed (Y1 / Y2 Axis)	M/min	-			-			7		
	Cutting Feed Rate (X / Z / Y Axis)	mm/rev.	0.001~500			0.001~500			0.001~500		
Motor	Main Spindle (Continuous)	kW(HP)	αP18i 9(12)	αP22i 11(14.7)	αP30i 15(20.1)	αP12i 5.5(7.4)	αP18i 9(12)	αP22i 11(14.7)	αP12i 5.5(7.4)	αP18i 9(12)	αP22i 11(14.7)
	Main Spindle (30 min. Rating)	kW(HP)	αP18i 11(14.7)	αP22i 15(20.1)	αP30i 18(24.8)	αP12i 7.5(10)	αP18i 11(14.7)	αP22i 15(20.1)	αP12i 7.5(10)	αP18i 11(14.7)	αP22i 15(20.1)
	Sub Spindle (Continuous)	kW(HP)	-	-	-	αi6 5.5(7.4)	αi6 5.5(7.4)	αi8 7.5(10)	αi6 5.5(7.4)	αi6 5.5(7.4)	αi8 7.5(10)
	Sub Spindle (30 min. Rating)	kW(HP)	-	-	-	αi6 7.5(10)	αi6 7.5(10)	αi8 11(14.7)	αi6 7.5(10)	αi6 7.5(10)	αi8 11(14.7)
	X Axis	kW(HP)	α12Bi - 3(4)	α12Bi - 3(4)	α22Bi - 4(5.4)	α12Bi- 3(4)	α12Bi- 3(4)	α22Bi- 4(5.4)	-		
	Z Axis	kW(HP)	α12i - 3(4)			α12i- 3(4)			-		
	B Axis	kW(HP)	-			α8i- 1.6(2.1)			α8i- 1.6(2.1)		
	Y Axis	kW(HP)	α4Bi - 1.4(1.9)	α4Bi - 1.4(1.9)	α8Bi - 1.6(2.1)	α4Bi- 1.4(1.9)	α4Bi- 1.4(1.9)	α8Bi- 1.6(2.1)	-		
	TD Axis	kW(HP)	α12i - 3(4)			α12i- 3(4)			α12i- 3(4)		
	X1 / X2 Axis	kW(HP)	-			-	-	-	α12Bi- 3(4)		
	Z1 / Z2 Axis	kW(HP)	-			-	-	-	α8i- 1.6(2.1)		
	Y1 / Y2 Axis	kW(HP)	-			-			α4Bi- 1.4(1.9)		
	TD1 / TD2 Axis	kW(HP)	-			-			α12i- 3(4)		
	Hydraulic Pump	kW(HP)	1.5(2)			1.5(2)			1.5(2)		
	Coolant Pump	W(HP)	750(1)			750(1)			750(1) x 2 sets		
Tailstock	Quill Dia.	mm(in)	Φ75(2.95)	Φ75(2.95)	Φ75(2.95)	-			-		
	Quill Travel	mm(in)	80(3.14)	80(3.14)	80(3.14)	-			-		
	Quill Taper	MT No.	MT No.4	MT No.4	MT No.5	-			-		
	Tailstock Travel	mm(in)	360(14.17)	500(19.68)	430(16.92)	-			-		
Tank Capacity	Hydraulic tank	Liter	60	60	60	60	60	60	60	60	60
	Coolant tank	Liter	100	100	100	100	100	100	100	100	100
Measurement	Floor space	mm	3550x2000	4000x2200	4000x2200	3750x2000	4000x2200	4000x2200	4150x2150		
	Total height	mm	2200	2200	2200	2200	2200	2200	2335		
	Weight (NW / GW)	Kgs	5500/5820	6320/6820	7000/7640	5480/6030	6640/7230	6830/7480	7670/8100	7800/8280	8000/8500

● **All specification, design and characteristics shown on this catalogue are subject to change without prior notice.**